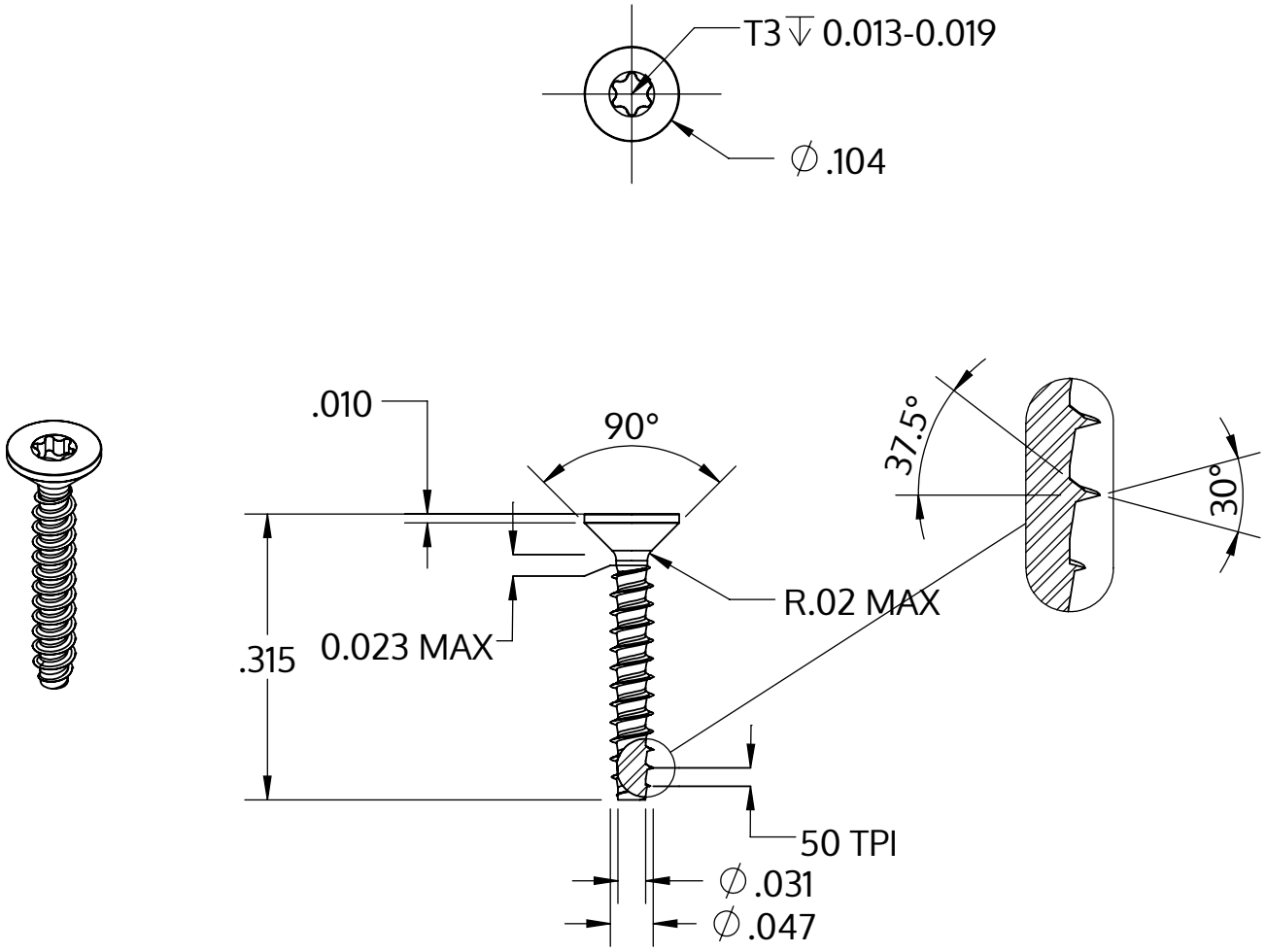

Metric size	M1.2 x 0.51 mm
US size (converted)	#0-50
	Tolerances [inch]
Length	+/- 0.017
Head diameter	+0 / -0.009
Head height	
Thread diameter	+0.003 / -0

Descriere	STP41 1.2x8.0 - T3
Material	oțel, călit
Exterior	zincat, Nichelat, pasivat negru / nu conține Cr-VI, recopt, ermetizat
Greutate	0.056 kg / 1000 unități

SCREWERK	**STP410120080B**	
_Zoll Zeichnung Größe A	Scalarea 5:1	2024-10