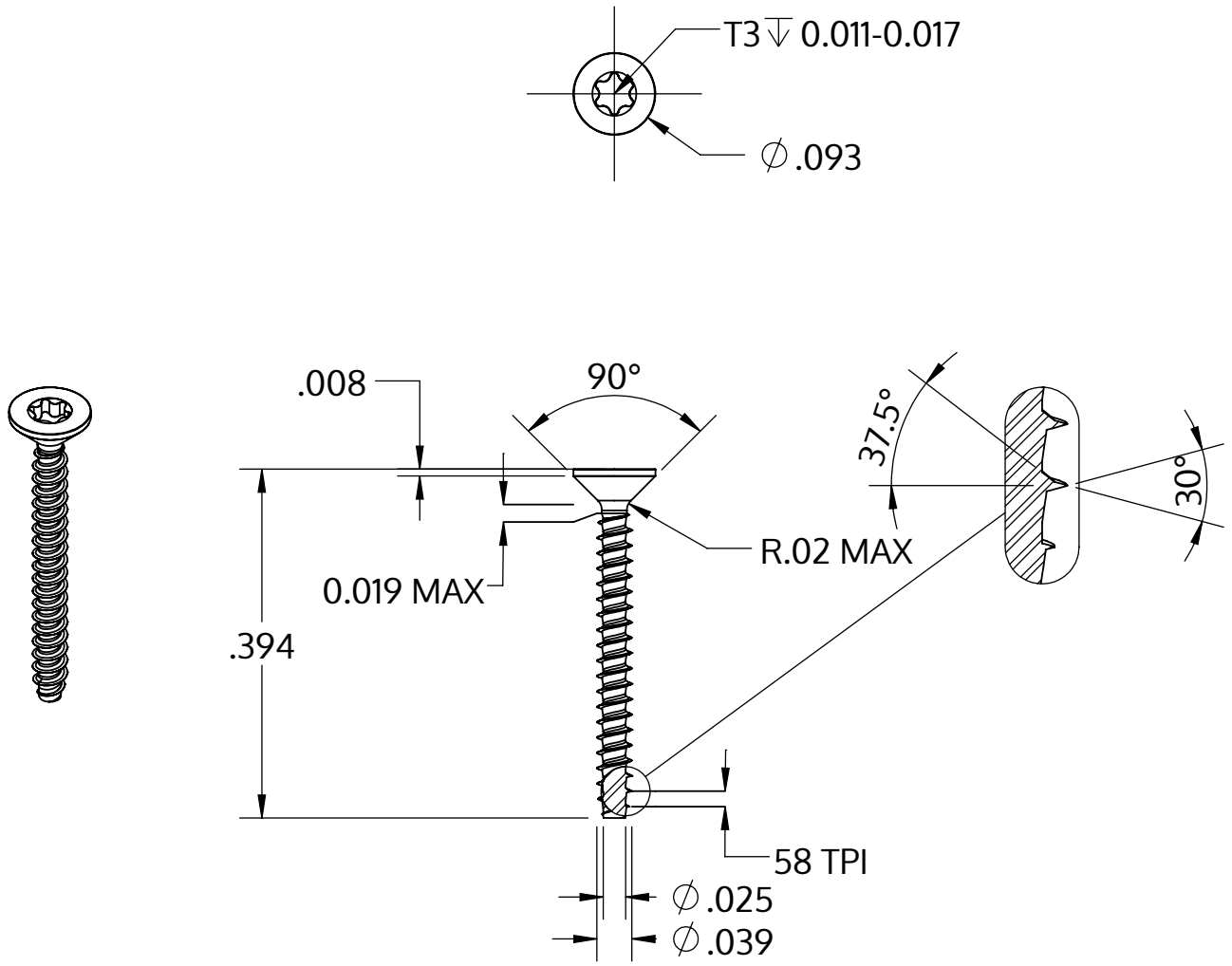

Metric size	M1 x 0.44 mm
US size (converted)	#0.039-58
	Tolerances [inch]
Length	+/- 0.017
Head diameter	+0 / -0.009
Head height	
Thread diameter	+0.003 / -0

Description	STP41 1.0x10.0 - T3
Material	steel, hardened
Surface	zinc-plated 5-7 µm, baked, blue / transparent passivated
Weight	0.047 kg / 1000 pieces

SCREWERK	**STP410100100S**	
Inch Drawing Size A	Scale 5:1	2024-10