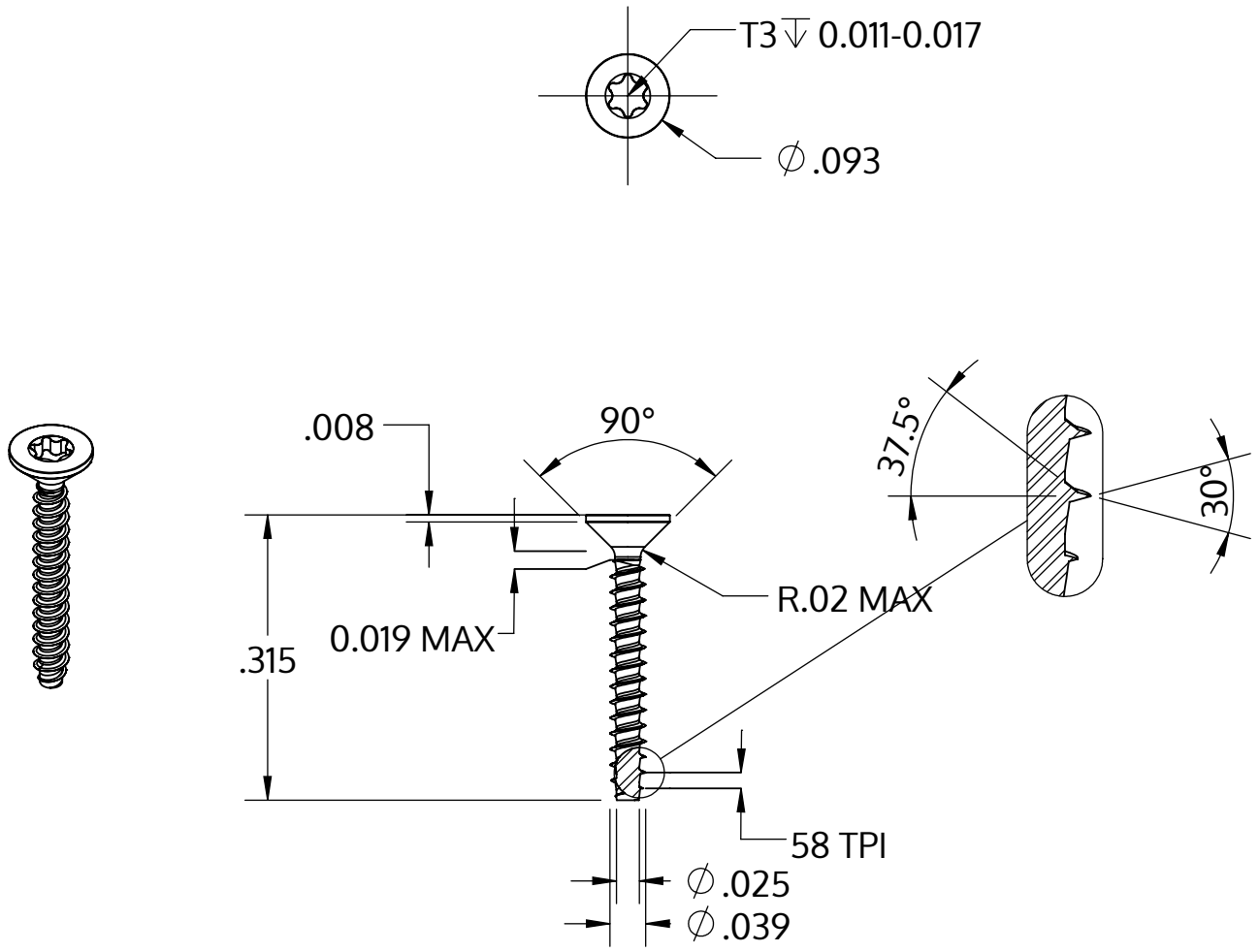


| | |
|---|---|
| Metric size | M1 x 0.44 mm |
| US size (converted) | #0.039-58 |
| | Tolerances [inch] |
| Length | +/- 0.017 |
| Head diameter | +0 / -0.009 |
| Head height | |
| Thread diameter | +0.003 / -0 |

| | |
|---|---|
| Descripción | STP41 1.0x8.0 - T3 |
| Material | Acero, endurecido |
| Superficie | Zinc-Niquelado, pasivado negro/ sin Cr-VI, recocido, sellado |
| Peso | 0.040 kg / 1000 Piezas |

| | | |
|---|---|---|
| SCREWERK | **STP410100080B** | |
| _Zoll Zeichnung Größe A | Escalada 5:1 | 2024-10 |