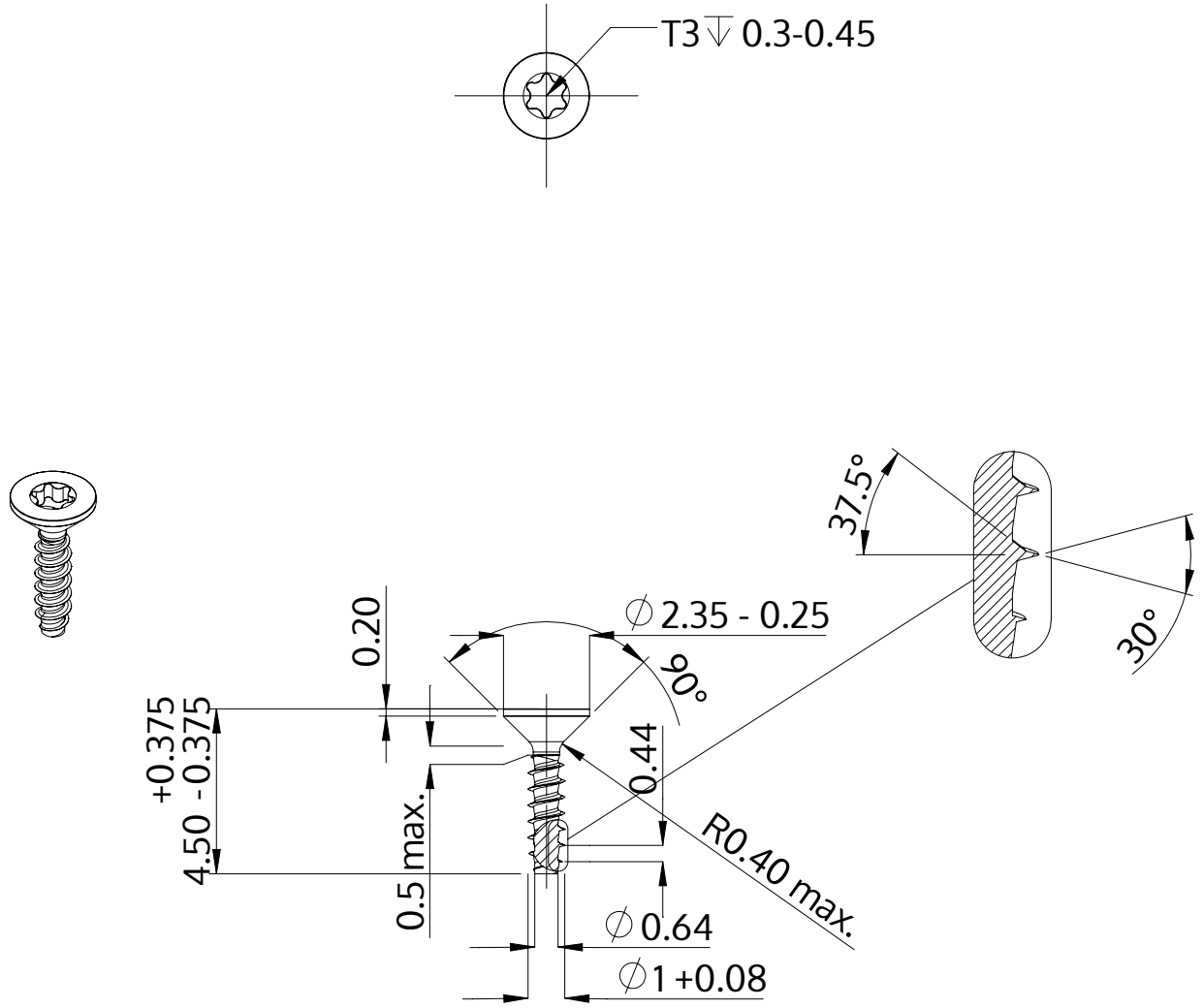

Description	STP41 1.0x4.5 - T3
Material	steel, hardened
Surface	Zinc-Nickel-plated min. 5µm, passivated black/ Cr-VI-free, baked, sealed
Weight	0.026 kg / 1000 pieces

SCREWERK	**STP410100045B**	
Metric Drawing A4	Scale None:1	2024-04