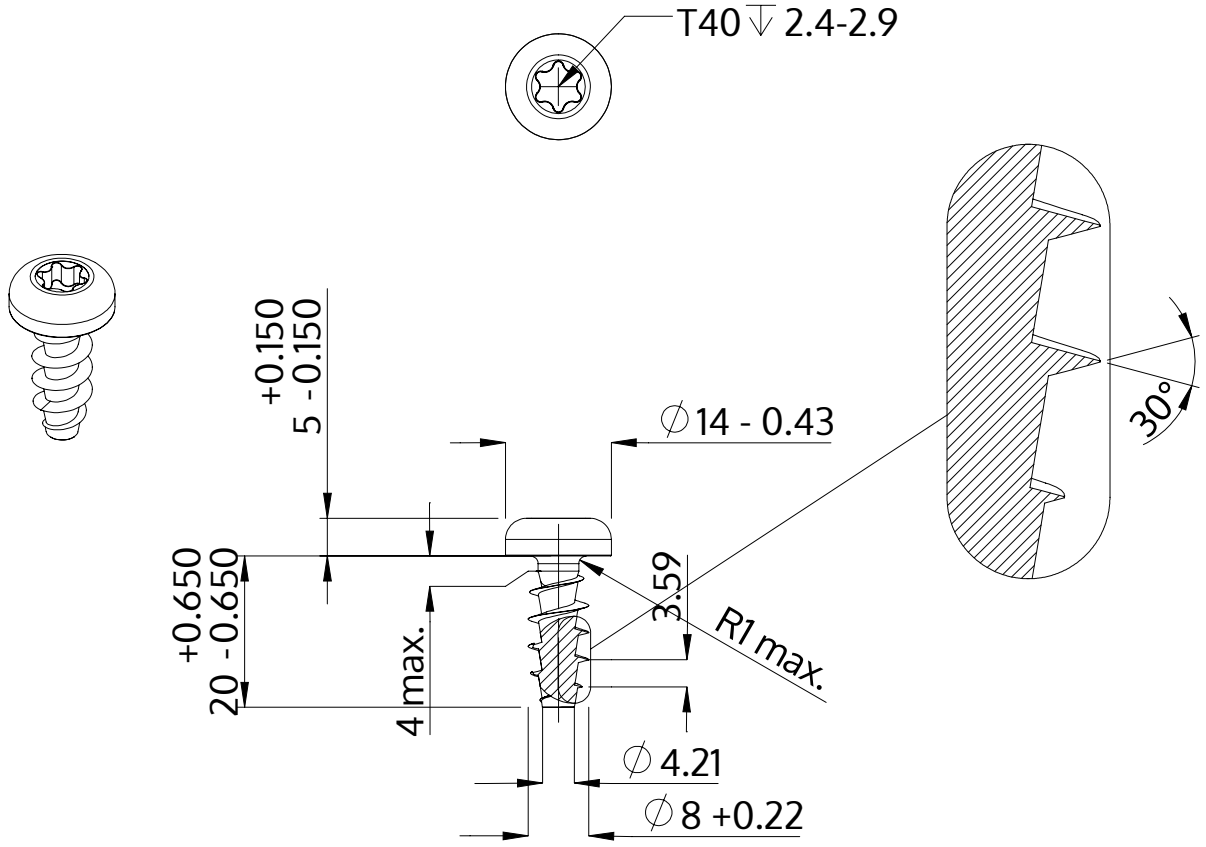

Description	STP39A 8.0x20.0 - T40
Material	stainless-steel A2
Surface	bright, pickled and passivated
Weight	7.805 kg / 1000 pieces

SCREWERK	**STP39A0800200E**	
Metric Drawing A4	Scale 1:1	2024-10