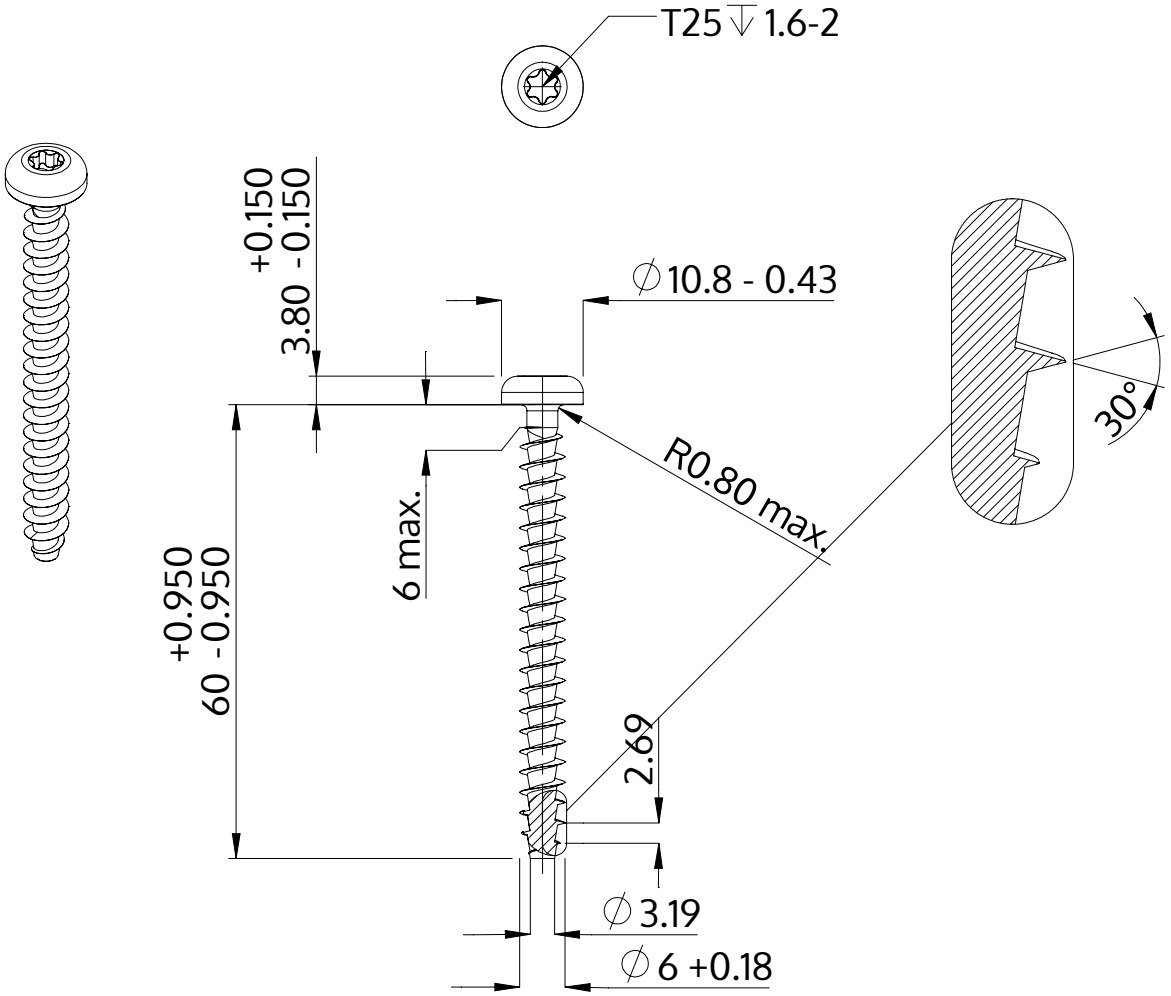

Description	STP39A 6.0x60.0 - T25
Material	stainless-steel A2
Surface	bright, pickled and passivated
Weight	8.007 kg / 1000 pieces

SCREWERK	**STP39A0600600E**	
Metric Drawing A4	Scale 1:1	2024-10