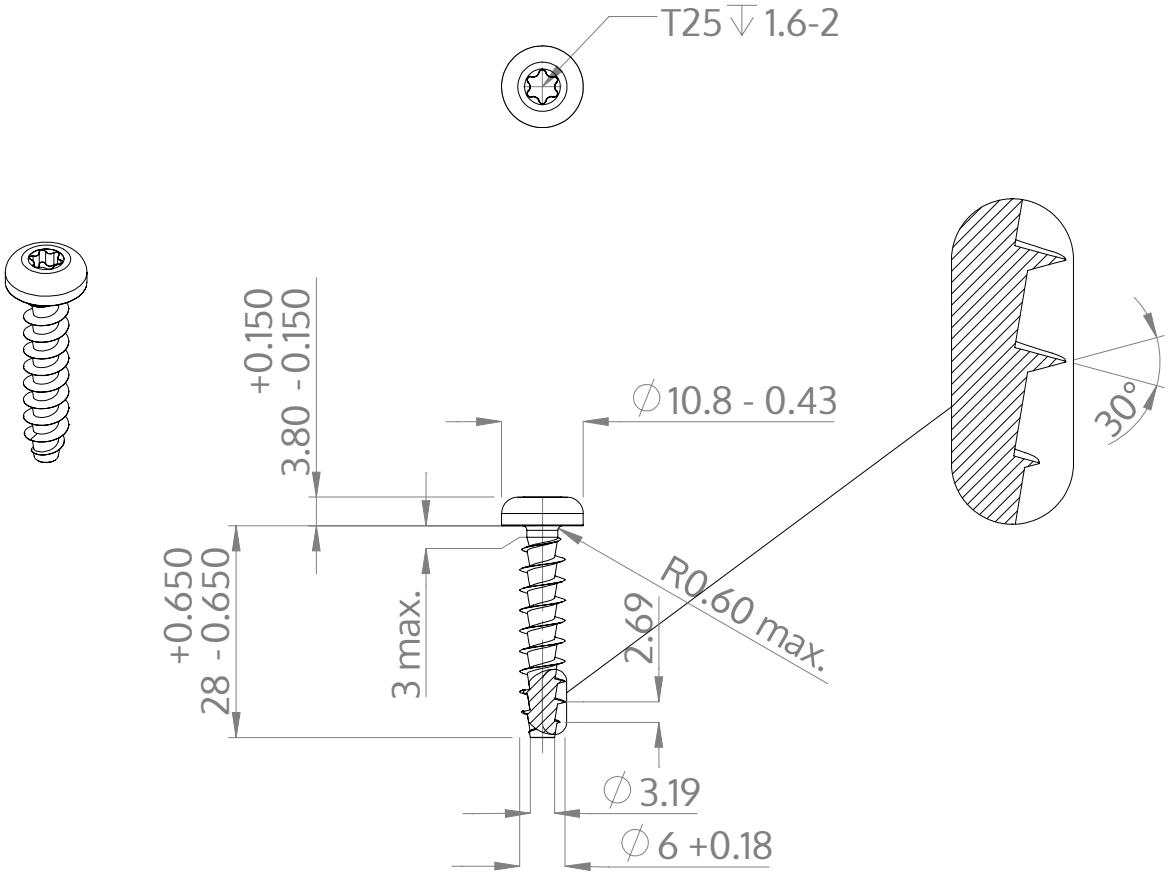

Description	STP39A 6.0x28.0 - T25
Material	steel, hardened
Surface	Zinc-Nickel-plated min. 5µm, passivated black/ Cr-VI-free, baked, sealed
Weight	4.868 kg / 1000 pieces

SCREWERK	**STP39A0600280B**	
Metric Drawing A4	Scale 1:1	2025-04