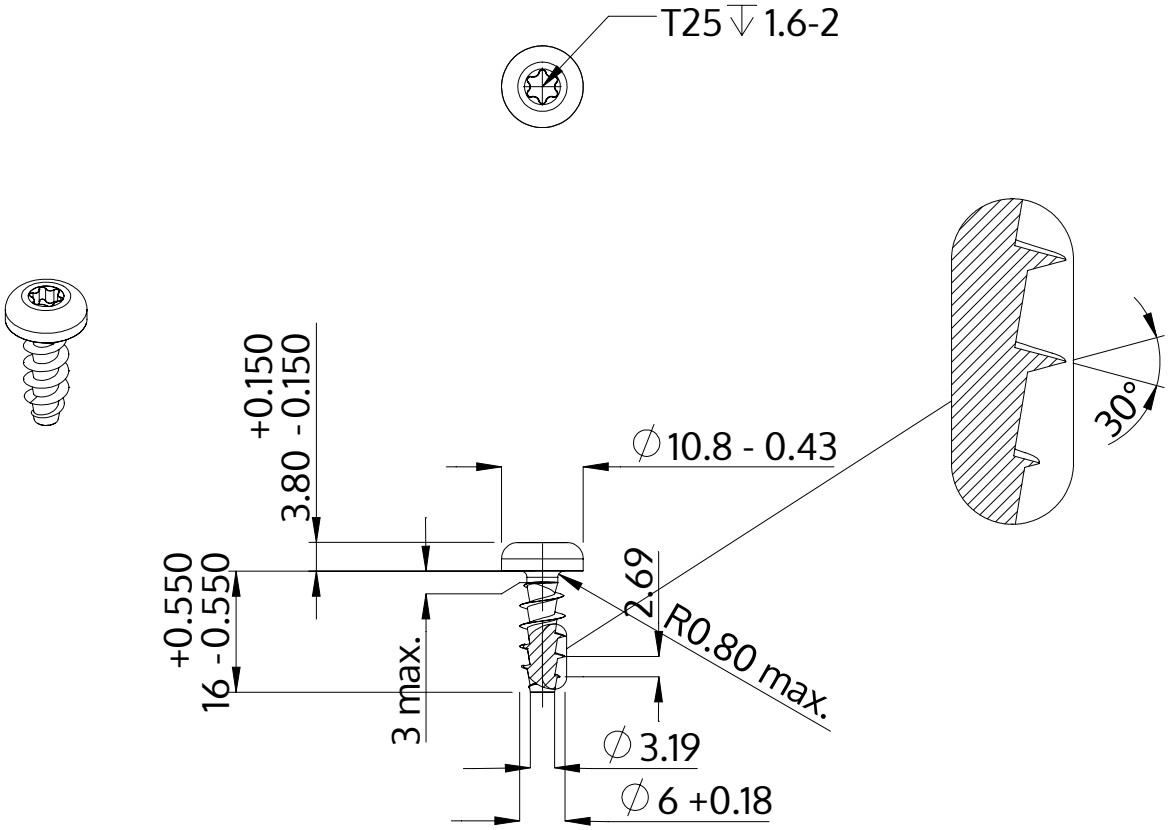


| | |
|---|---|
| Description | STP39A 6.0x16.0 - T25 |
| Material | steel, hardened |
| Surface | Zinc-Nickel-plated min. 5µm, passivated black/ Cr-VI-free, baked, sealed |
| Weight | 3.627 kg / 1000 pieces |

| | | |
|---|---|---|
| SCREWERK | **STP39A0600160B** | |
| Metric Drawing A4 | Scale 1:1 | 2025-03 |