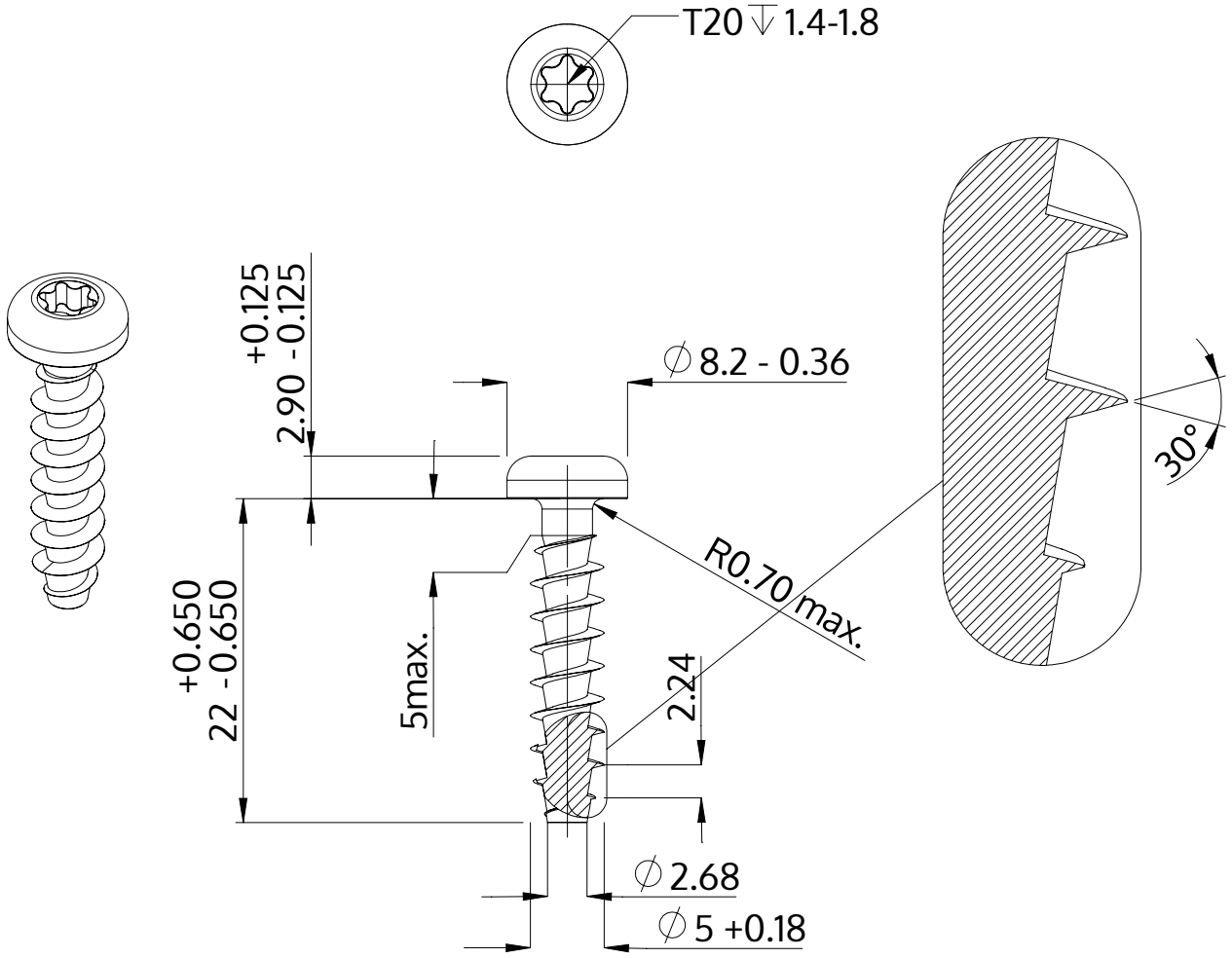

Description	STP39A 5.0x22.0 - T20
Material	steel, hardened
Surface	Zinc-Nickel-plated min. 5µm, passivated black/ Cr-VI-free, baked, sealed
Weight	2.449 kg / 1000 pieces

SCREWERK	**STP39A0500220B**	
Metric Drawing A4	Scale 2:1	2024-10