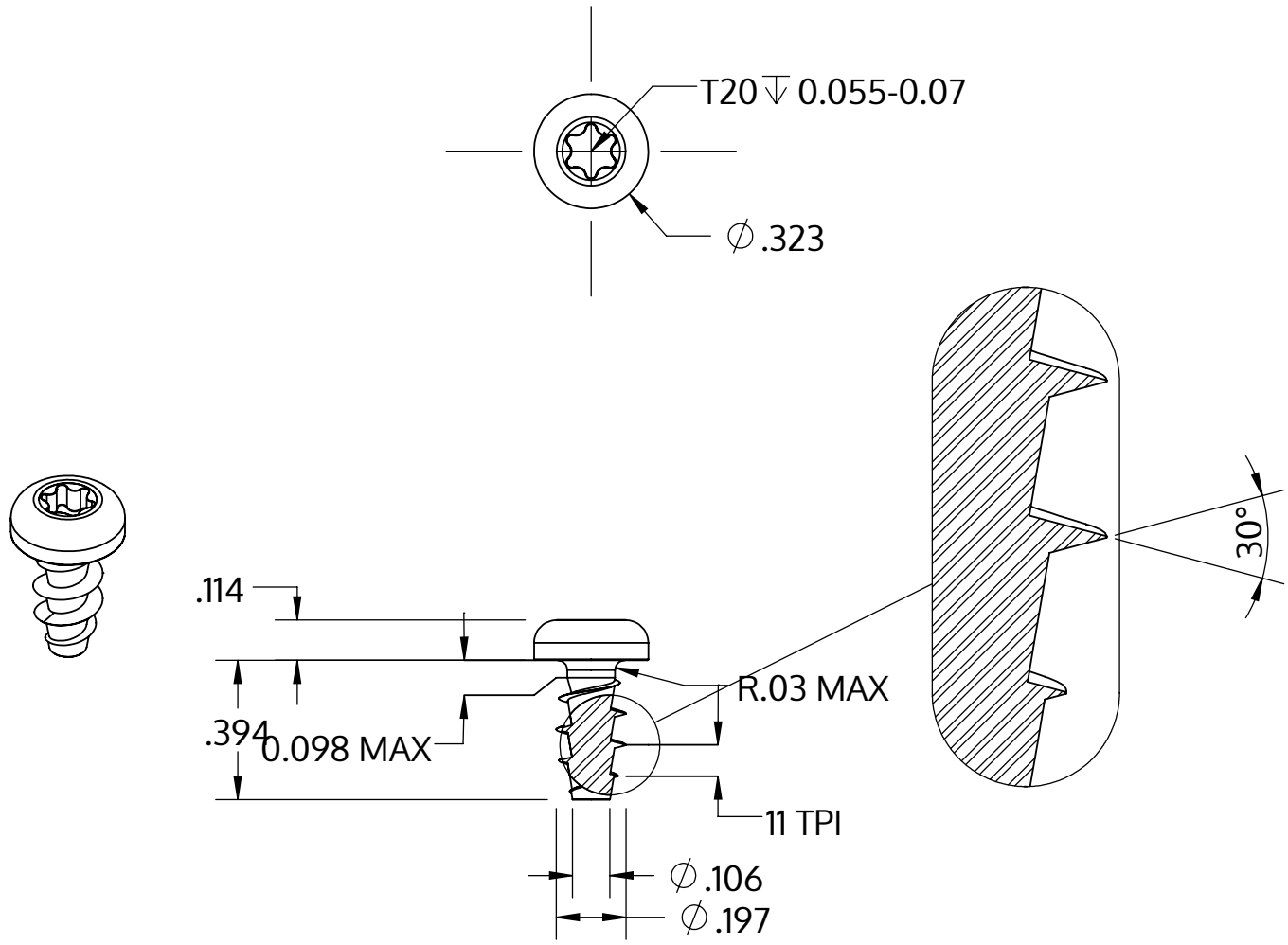

Metric size	M5 x 2.24 mm
US size (converted)	#11-11
	Tolerances [inch]
Length	+/- 0.017
Head diameter	+0 / -0.014
Head height	+/- 0.004
Thread diameter	+0.007 / -0

Descrizione	STP39A 5.0x10.0 - T20
Materiale	acciaio inossidabile A2
Superficie	bianco-decapato e passivato
Peso	1.560 kg / 1000 pezzi

SCREWERK	**STP39A0500100E**	
_Zoll Zeichnung Größe A	Scala 2:1	2024-10