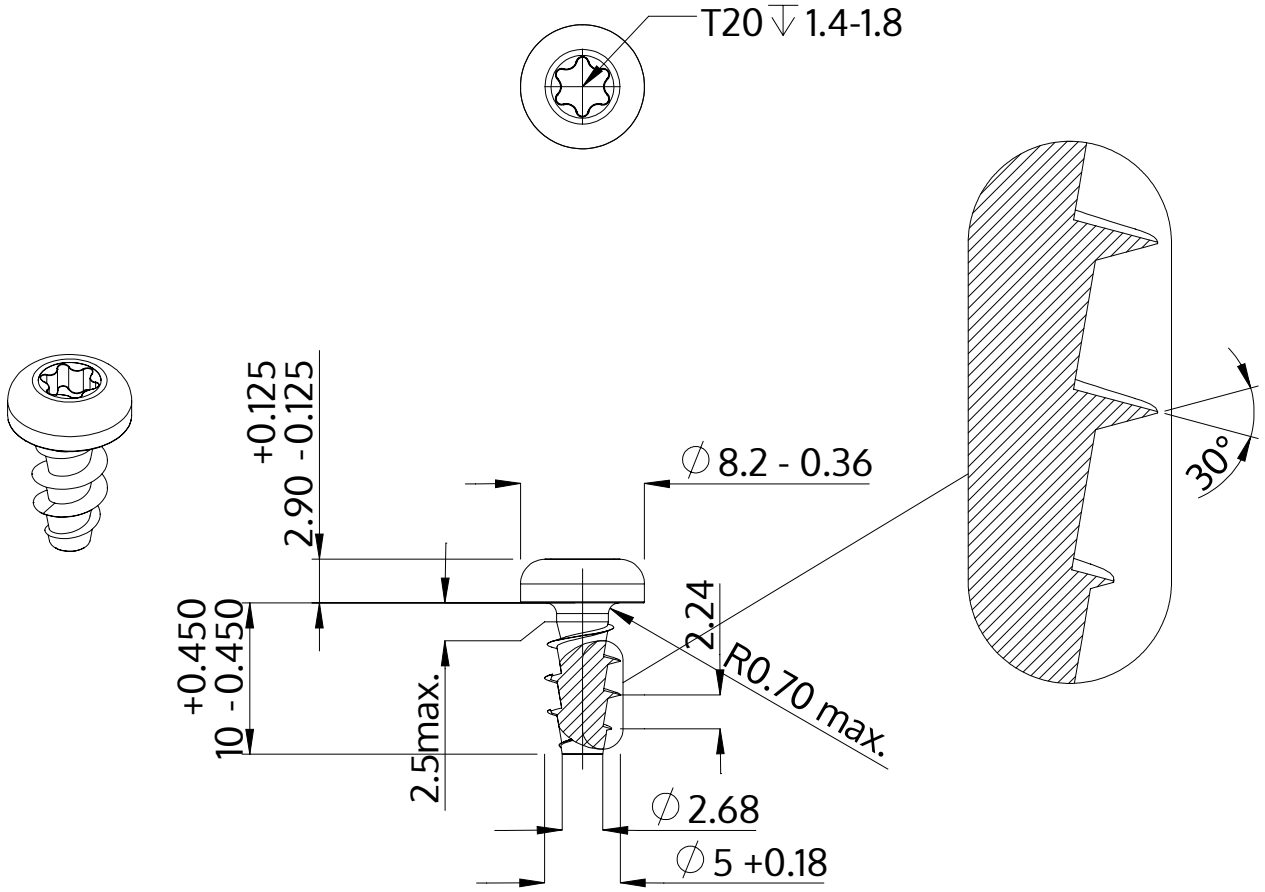

Description	STP39A 5.0x10.0 - T20
Material	stainless-steel A2
Surface	bright, pickled and passivated
Weight	1.560 kg / 1000 pieces

SCREWERK	**STP39A0500100E**	
Metric Drawing A4	Scale 2:1	2024-10