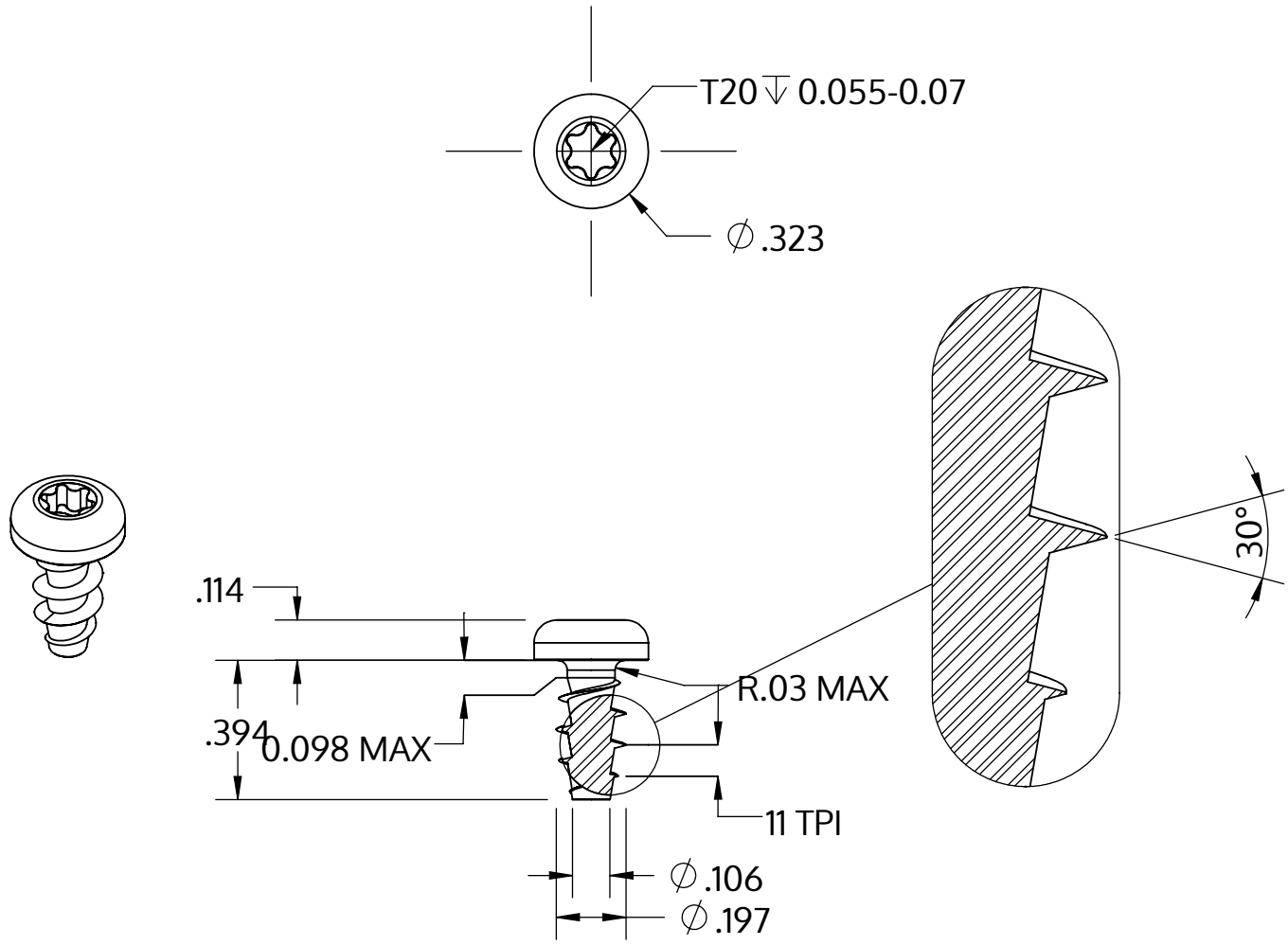

Metric size	M5 x 2.24 mm
US size (converted)	#11-11
	Tolerances [inch]
Length	+/- 0.017
Head diameter	+0 / -0.014
Head height	+/- 0.004
Thread diameter	+0.007 / -0

Descriere	STP39A 5.0x10.0 - T20
Material	oțel, călit
Exterior	zincat, Nichelat, pasivat negru / nu conține Cr-VI, recopt, ermetizat
Greutate	1.560 kg / 1000 unități

SCREWERK	**STP39A0500100B**	
_Zoll Zeichnung Größe A	Scalarea 2:1	2024-10