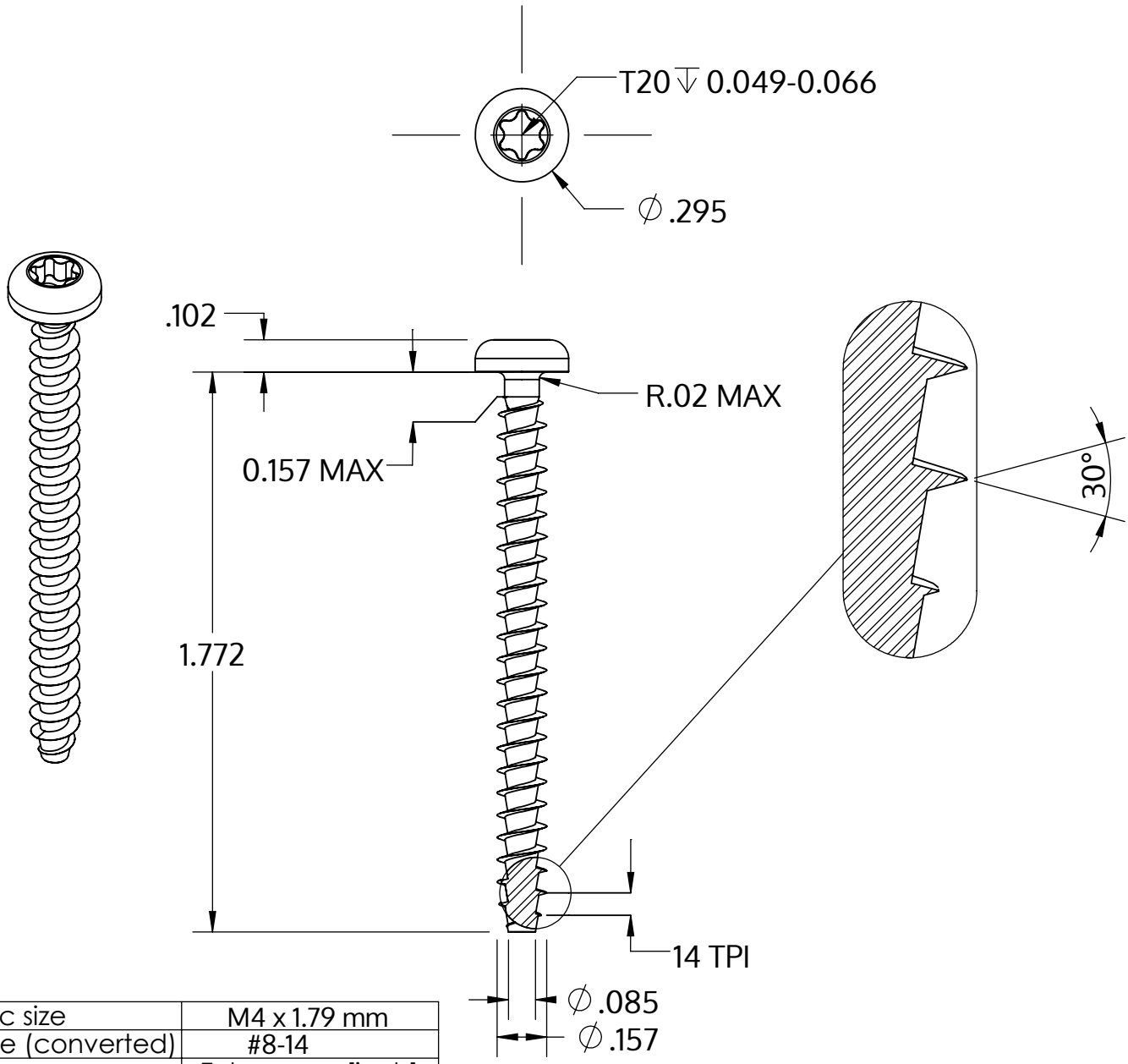


| | |
|---|---|
| Metric size | M4 x 1.79 mm |
| US size (converted) | #8-14 |
| | Tolerances [inch] |
| Length | +/- 0.031 |
| Head diameter | +0 / -0.014 |
| Head height | +/- 0.004 |
| Thread diameter | +0.007 / -0 |

| | |
|---|---|
| Descripción | STP39A 4.0x45.0 - T20 |
| Material | Acero Inoxidable A2 |
| Superficie | Laminado brillante, barnizado y pasivado |
| Peso | 2.794 kg / 1000 Piezas |

SCREWERK

**STP39A0400450E**

| | | |
|---|---|---|
| _Zoll Zeichnung Größe A | Escalada 2:1 | 2024-10 |