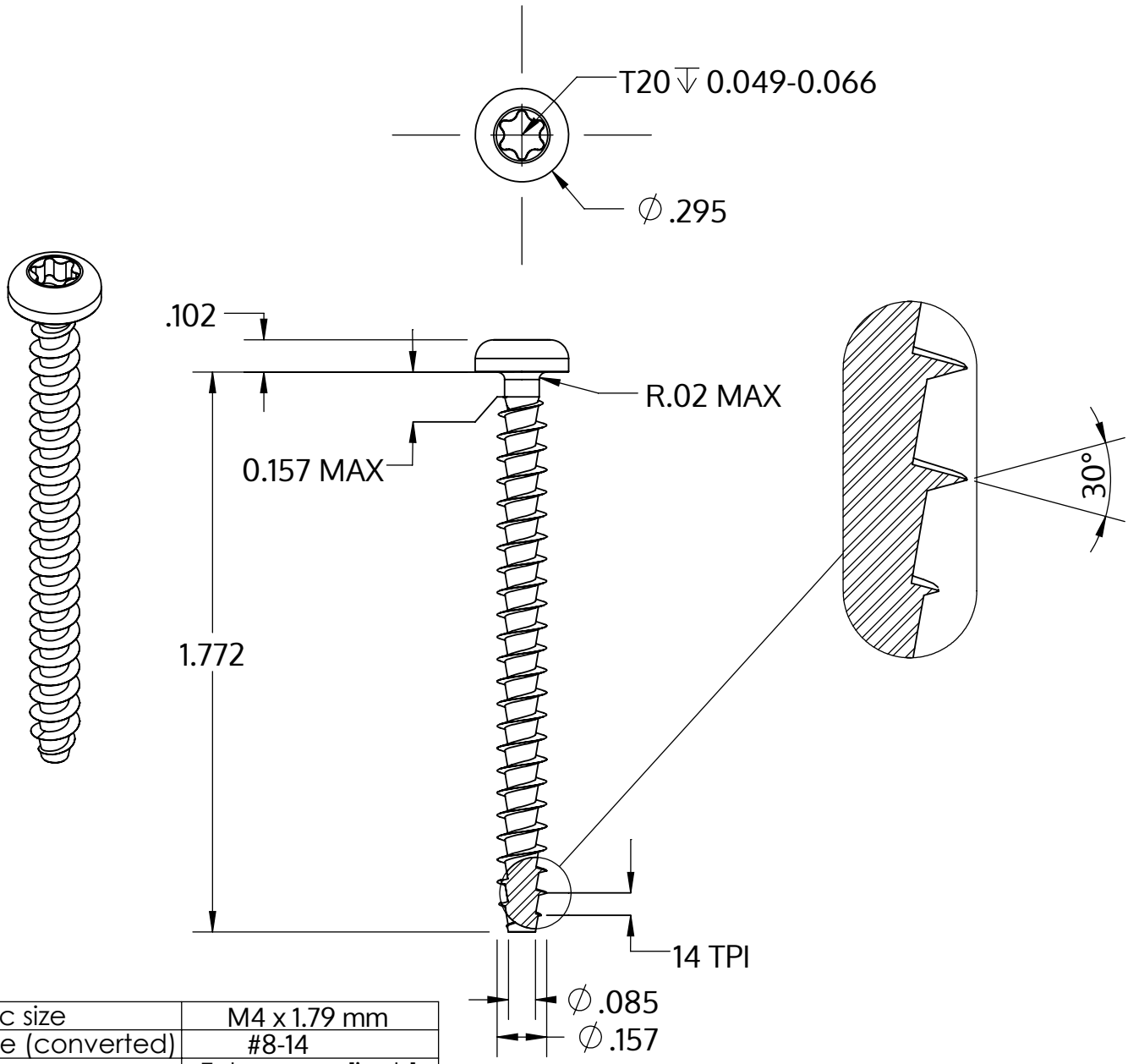

Metric size	M4 x 1.79 mm
US size (converted)	#8-14
	Tolerances [inch]
Length	+/- 0.031
Head diameter	+0 / -0.014
Head height	+/- 0.004
Thread diameter	+0.007 / -0

Description	STP39A 4.0x45.0 - T20
Material	stainless-steel A2
Surface	bright, pickled and passivated
Weight	2.794 kg / 1000 pieces

SCREWERK

STP39A0400450E

Inch Drawing Size A	Scale 2:1	2024-10