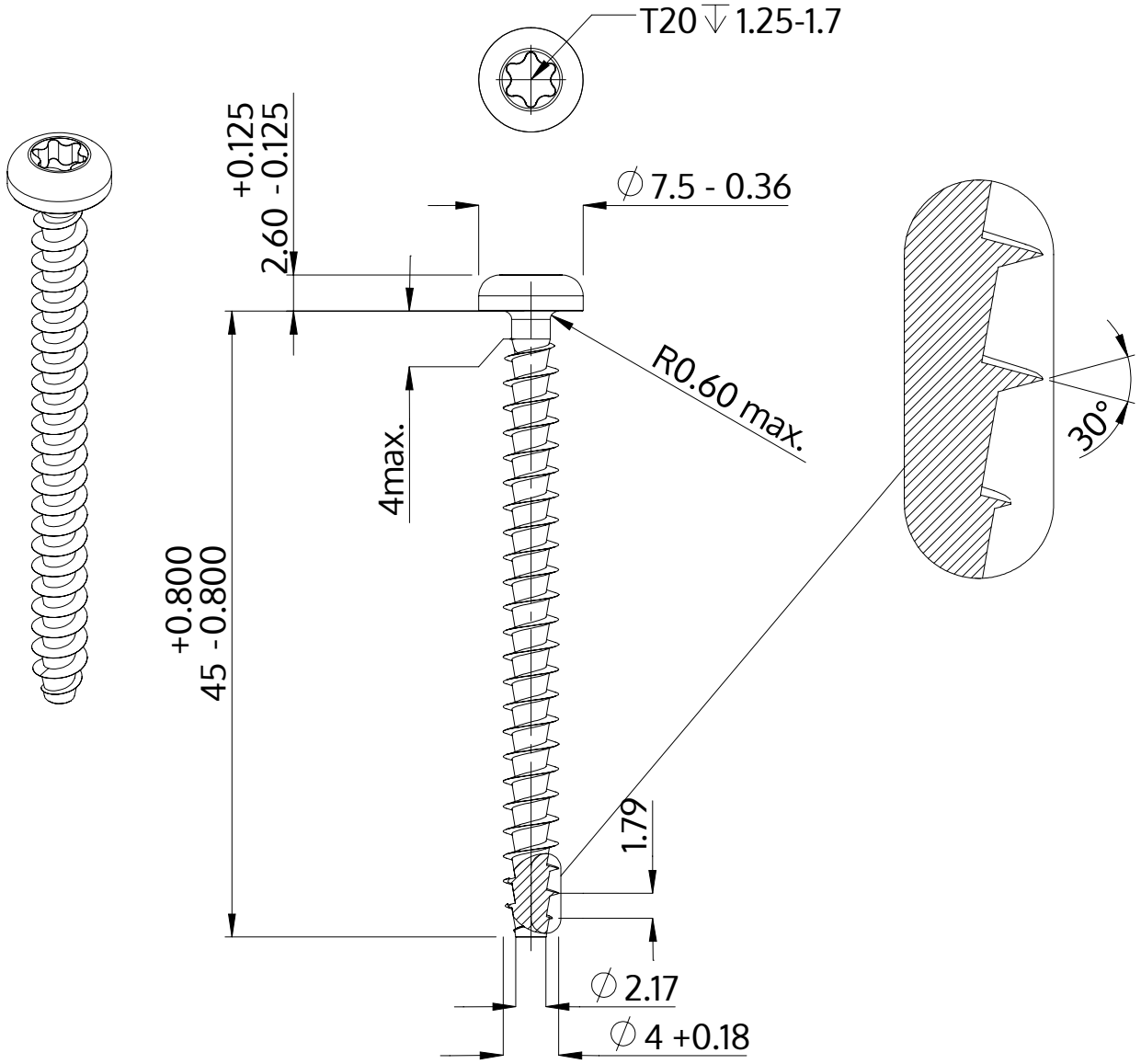

Description	STP39A 4.0x45.0 - T20
Material	stainless-steel A2
Surface	bright, pickled and passivated
Weight	2.794 kg / 1000 pieces

SCREWERK	**STP39A0400450E**	
Metric Drawing A4	Scale 2:1	2024-10