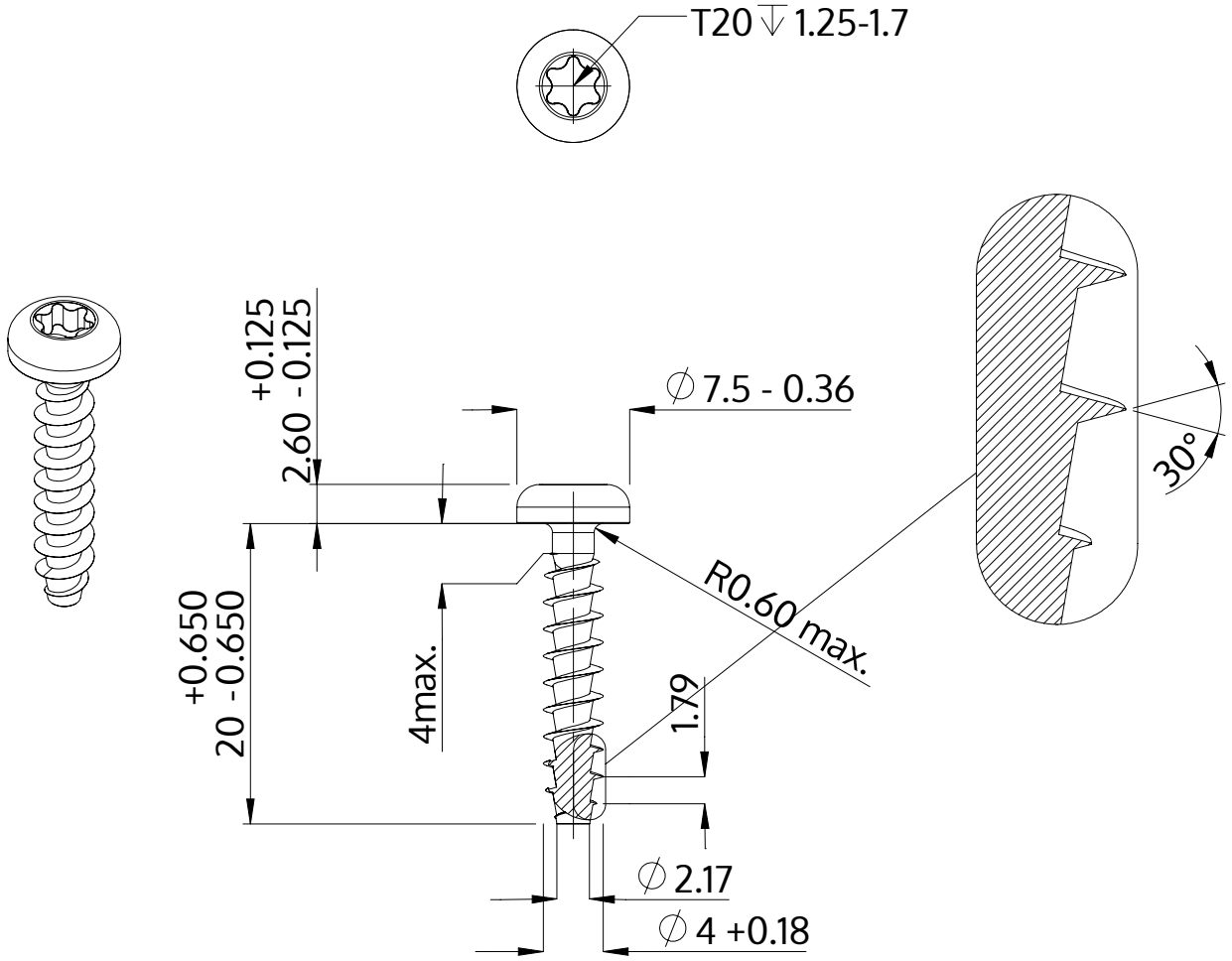

Description	STP39A 4.0x20.0 - T20
Material	stainless steel A4
Surface	bright, pickled and passivated
Weight	1.587 kg / 1000 pieces

SCREWERK	**STP39A0400200C**	
Metric Drawing A4	Scale 2:1	2024-10