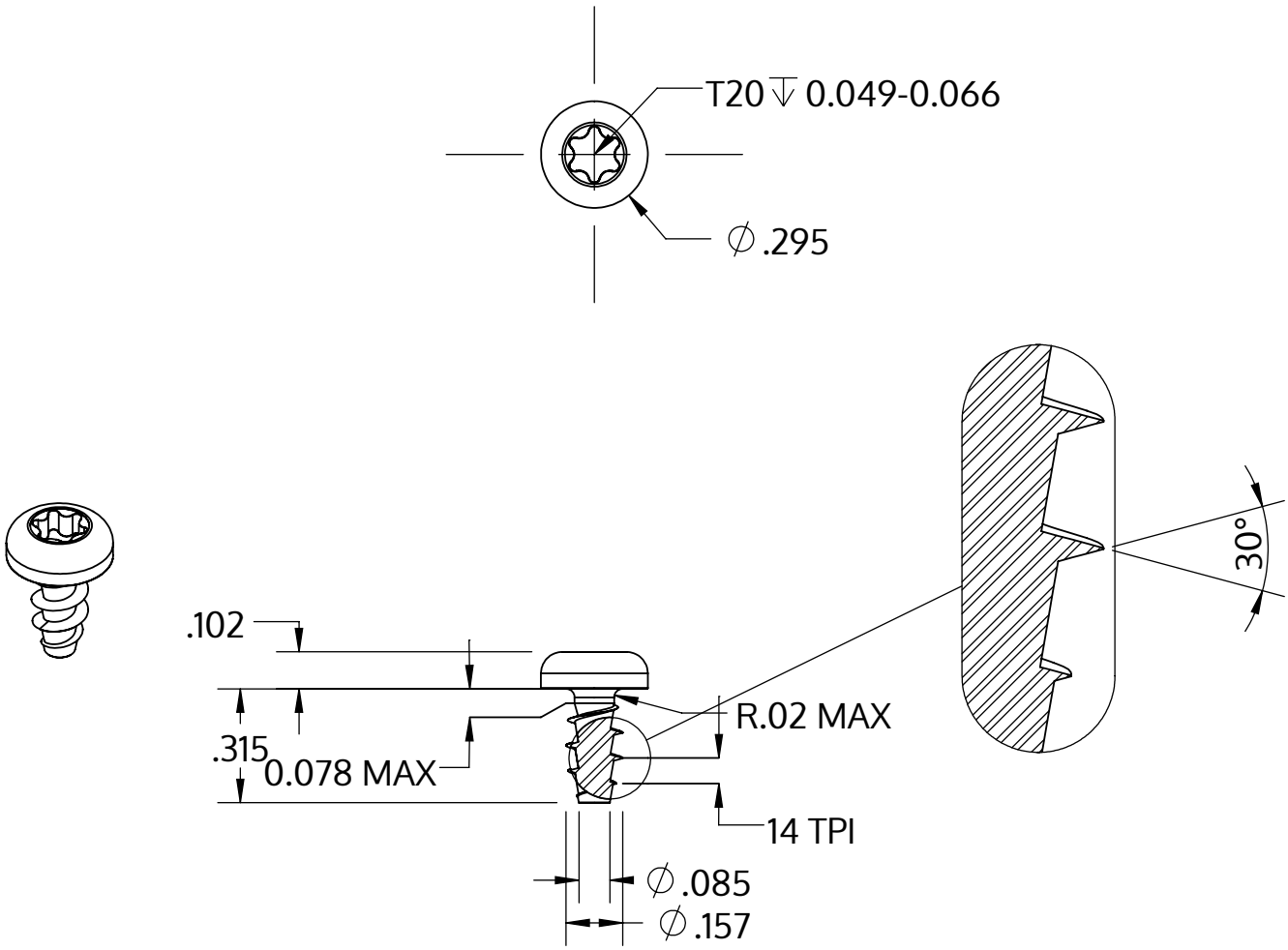

Metric size	M4 x 1.79 mm
US size (converted)	#8-14
	Tolerances [inch]
Length	+/- 0.017
Head diameter	+0 / -0.014
Head height	+/- 0.004
Thread diameter	+0.007 / -0

Descriere	STP39A 4.0x8.0 - T20
Material	oțel, călit
Exterior	zincat 5-7 µm, recopt, pasivat transparent/albastru
Greutate	1.008 kg / 1000 unități

SCREWERK	**STP39A0400080S**	
_Zoll Zeichnung Größe A	Scalarea 2:1	2024-10