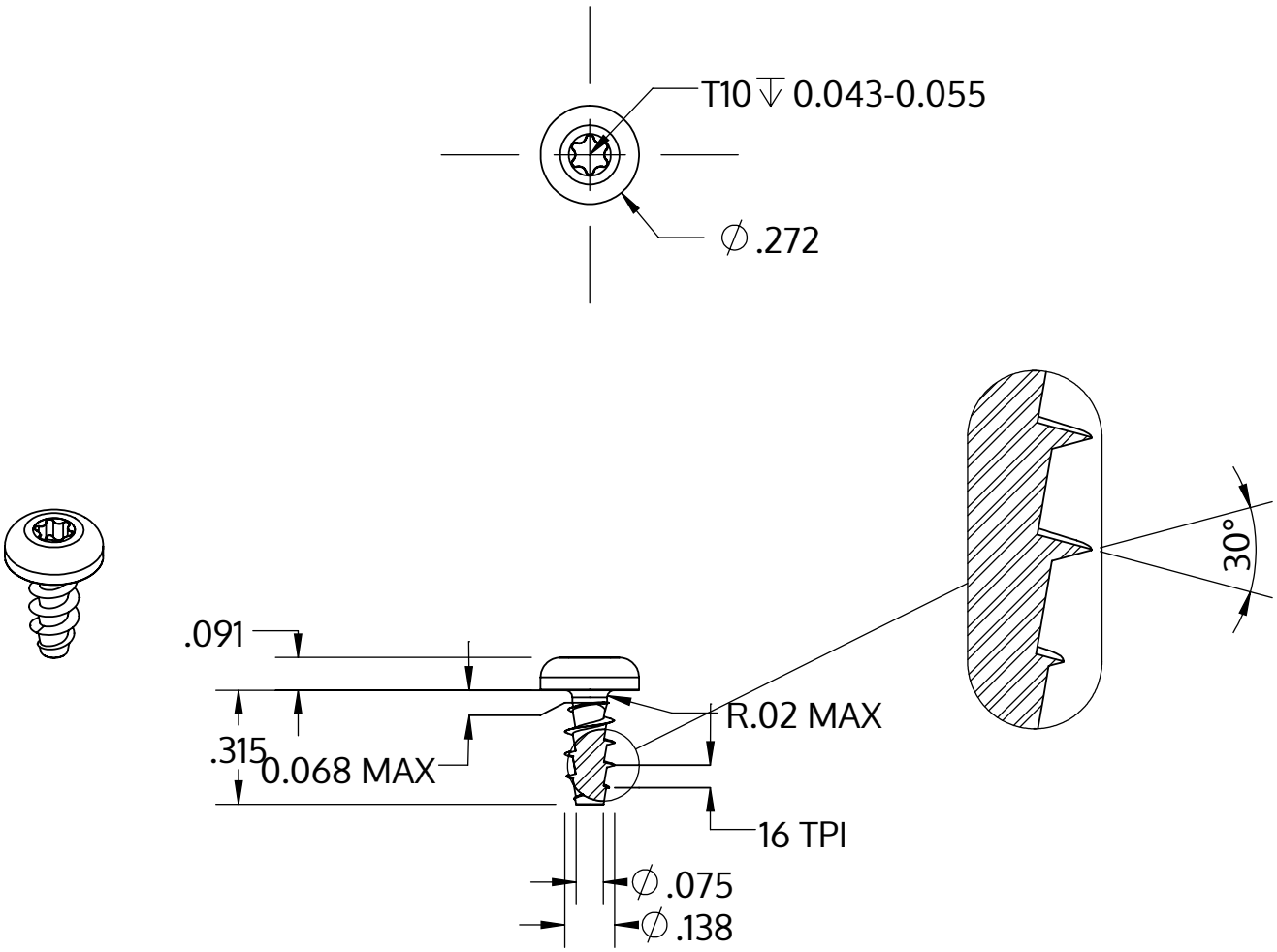


| | |
|---|---|
| Metric size | M3.5 x 1.57 mm |
| US size (converted) | #6-16 |
| | Tolerances [inch] |
| Length | +/- 0.017 |
| Head diameter | +0 / -0.014 |
| Head height | +/- 0.004 |
| Thread diameter | +0.007 / -0 |

| | |
|---|---|
| Beschrijving | STP39A 3.5x8.0 - T10 |
| Materiaal | roestvrij staal A2 |
| Oppervlak | blank, geetst en gepassieveerd |
| Gewicht | 0.788 kg / 1000 stuk |

| | | |
|---|---|---|
| SCREWERK | **STP39A0350080E** | |
| _Zoll Zeichnung Größe A | Schaal 2:1 | 2024-10 |