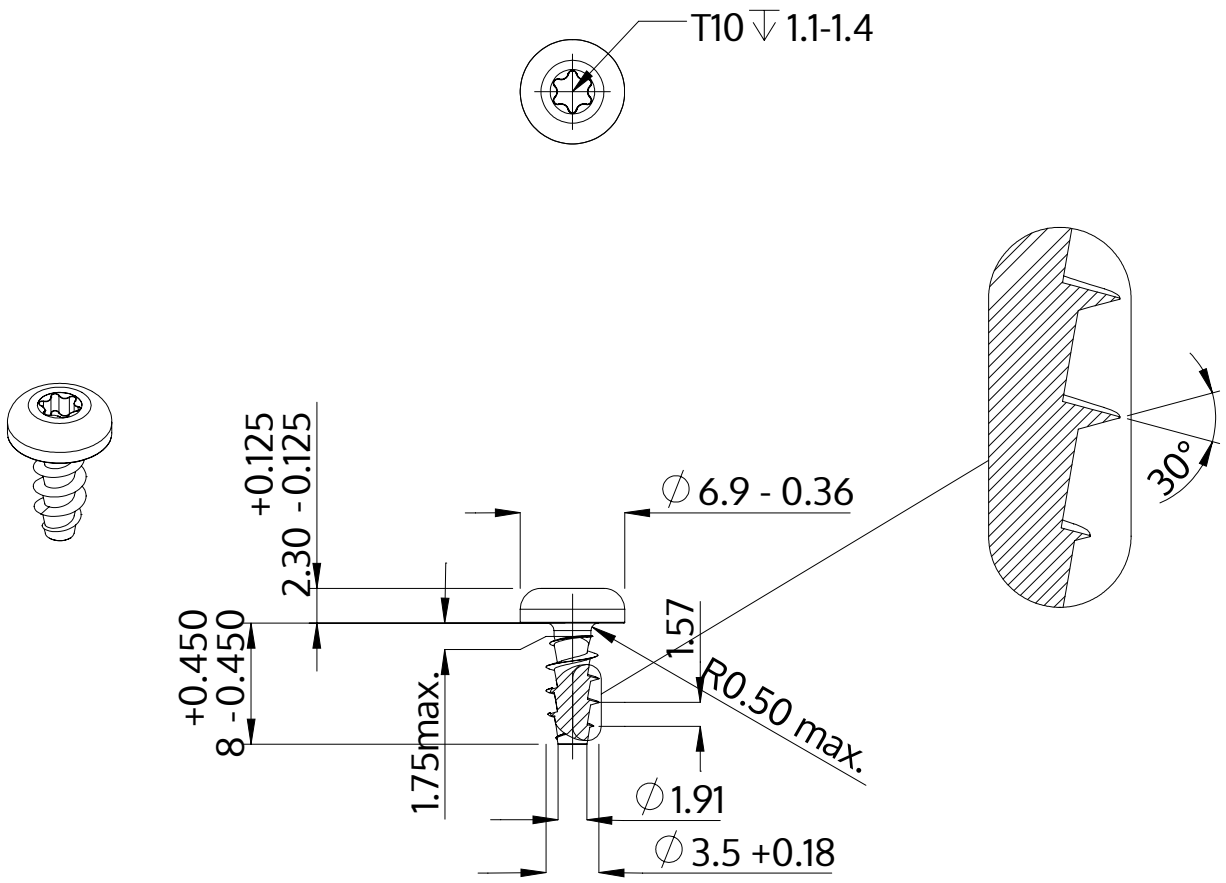

Description	STP39A 3.5x8.0 - T10
Material	stainless-steel A2
Surface	bright, pickled and passivated
Weight	0.788 kg / 1000 pieces

SCREWERK	**STP39A0350080E**	
Metric Drawing A4	Scale 2:1	2024-10