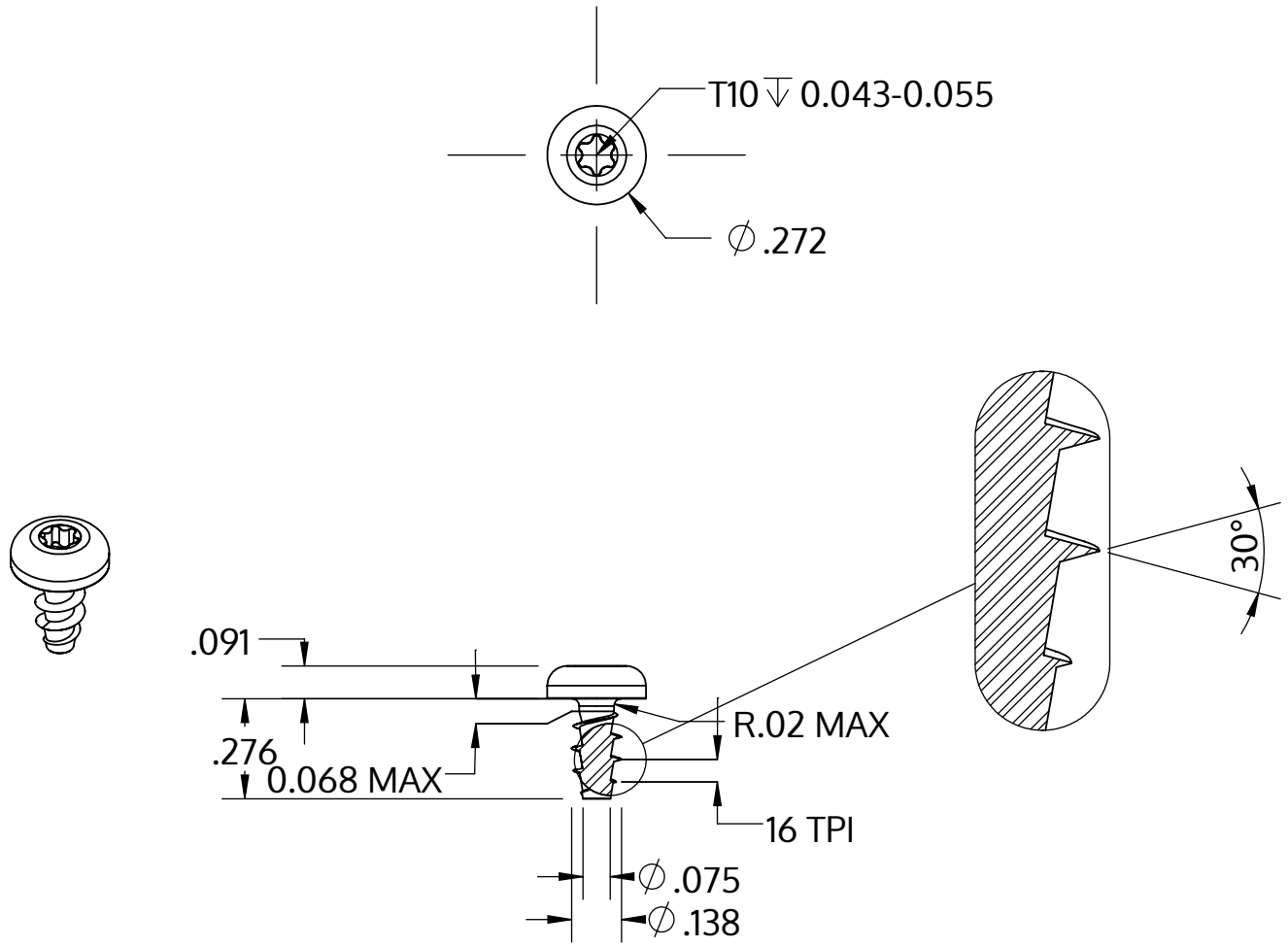

Metric size	M3.5 x 1.57 mm
US size (converted)	#6-16
	Tolerances [inch]
Length	+/- 0.017
Head diameter	+0 / -0.014
Head height	+/- 0.004
Thread diameter	+0.007 / -0

Descriere	STP39A 3.5x7.0 - T10
Material	oțel, călit
Exterior	zincat, Nichelat, pasivat negru / nu conține Cr-VI, recopt, ermetizat
Greutate	0.751 kg / 1000 unități

SCREWERK	**STP39A0350070B**	
_Zoll Zeichnung Größe A	Scalarea 2:1	2024-10