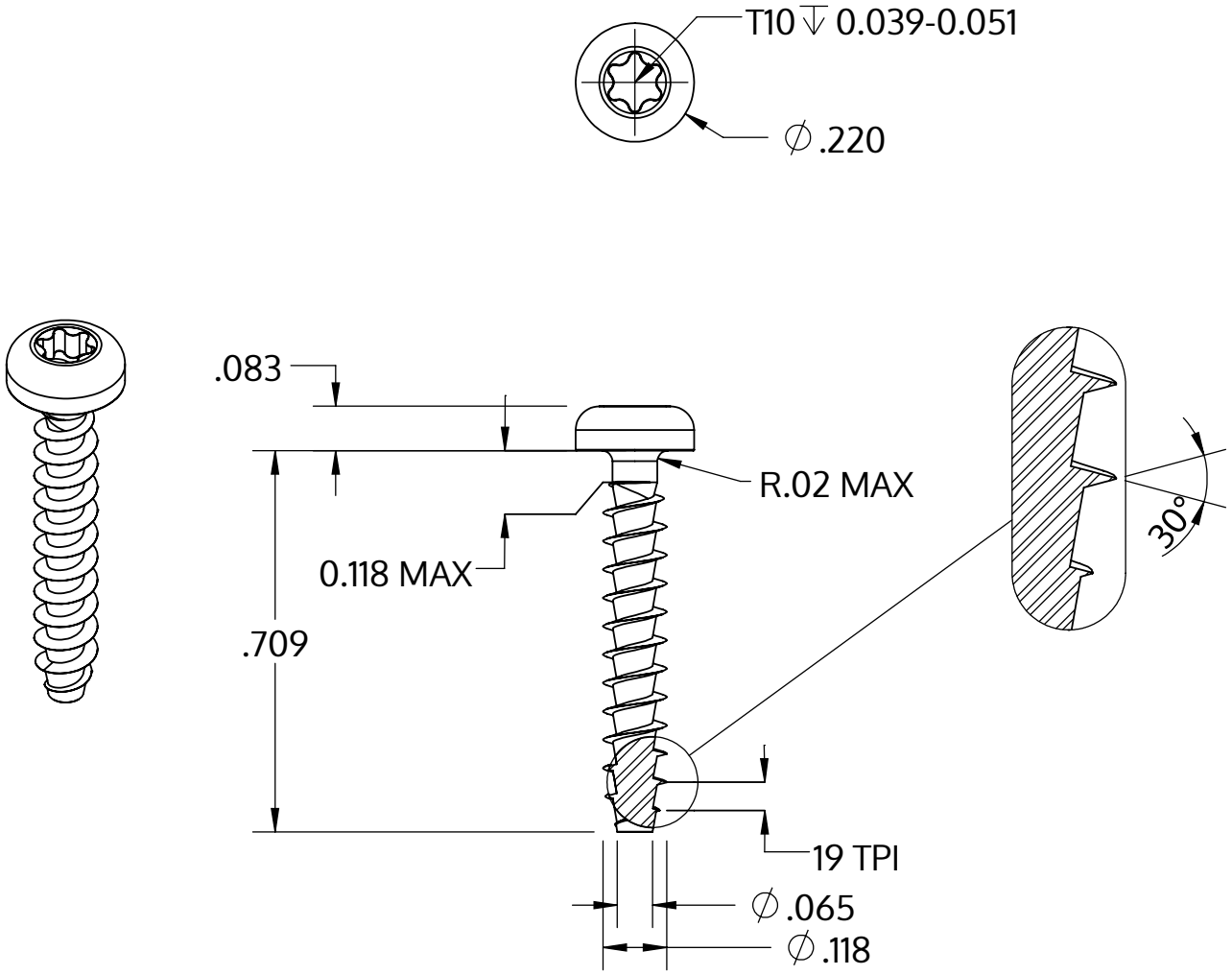

Metric size	M3 x 1.34 mm
US size (converted)	#4-19
	Tolerances [inch]
Length	+/- 0.021
Head diameter	+0 / -0.011
Head height	+/- 0.004
Thread diameter	+0.005 / -0

Description	STP39A 3.0x18.0 - T10
Material	stainless-steel A2
Surface	bright, pickled and passivated
Weight	0.789 kg / 1000 pieces

SCREWERK	**STP39A0300180E**	
Inch Drawing Size A	Scale 3:1	2024-10