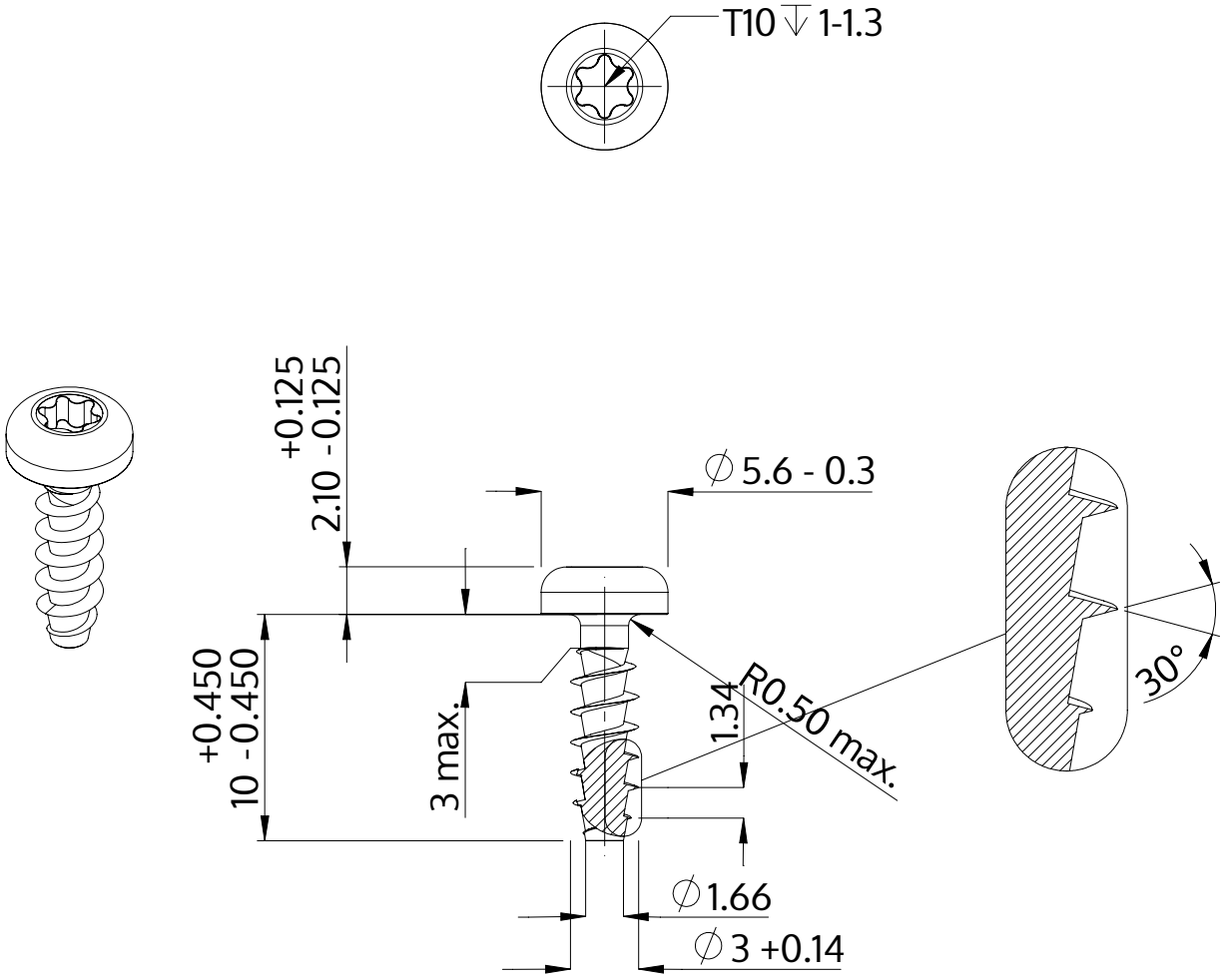

Description	STP39A 3.0x10.0 - T10
Material	steel, hardened
Surface	zinc-plated 5-7 µm, baked, blue / transparent passivated
Weight	0.560 kg / 1000 pieces

SCREWERK	**STP39A0300100S**	
Metric Drawing A4	Scale None:1	2024-04