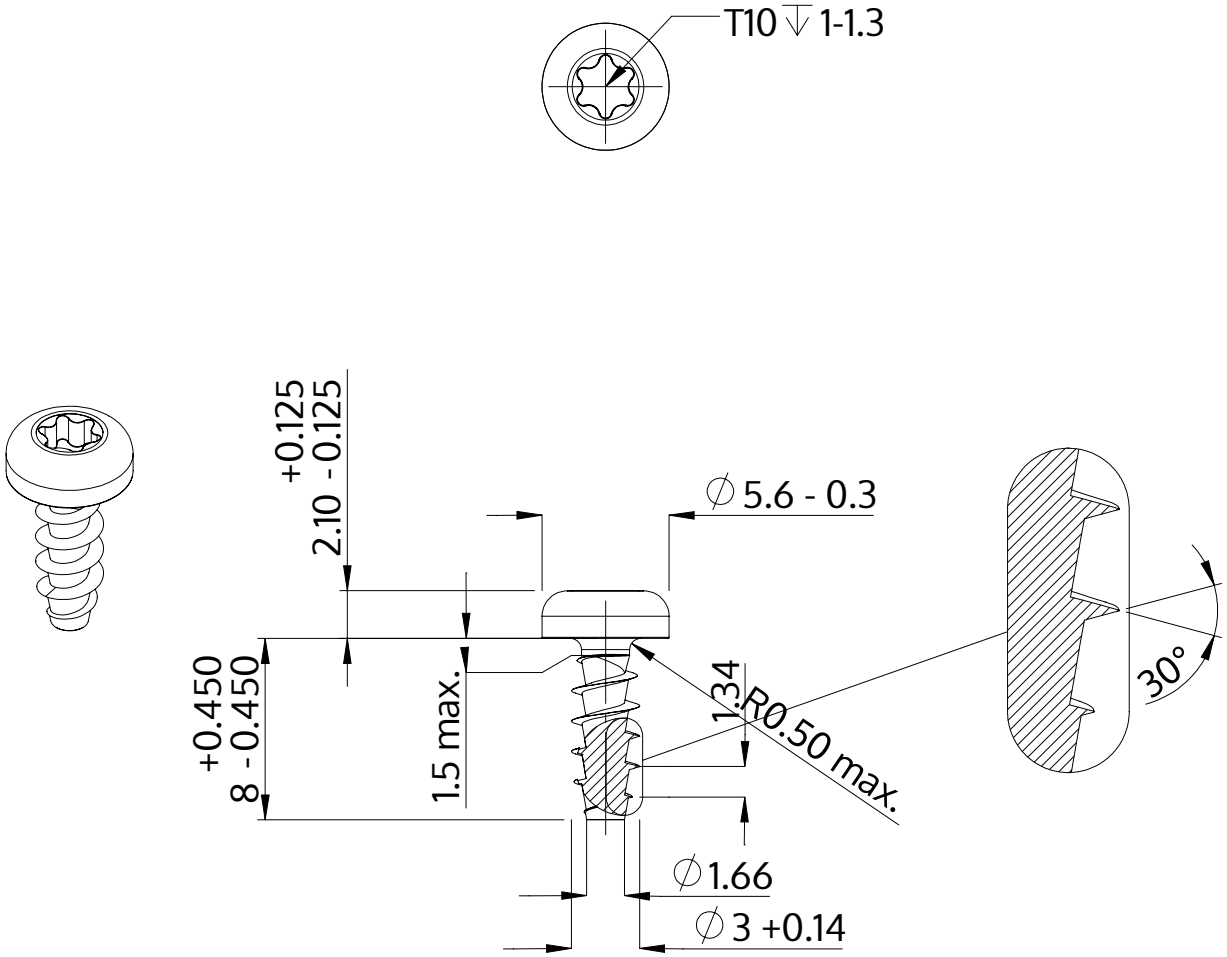

Description	STP39A 3.0x8.0 - T10
Material	stainless-steel A2
Surface	bright, pickled and passivated
Weight	0.502 kg / 1000 pieces

SCREWERK	**STP39A0300080E**	
Metric Drawing A4	Scale 3:1	2024-10