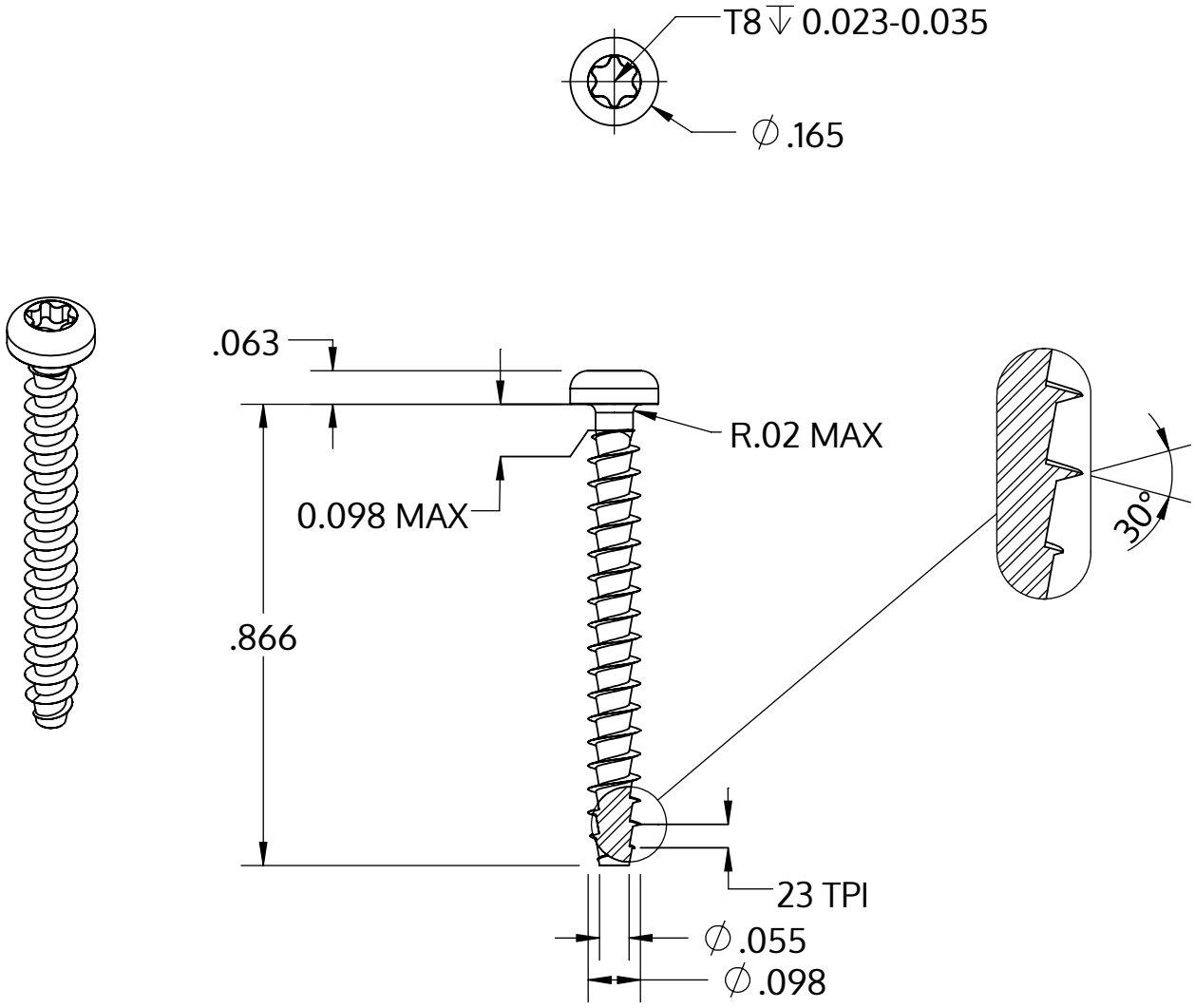

Metric size	M2.5 x 1.12 mm
US size (converted)	#3-23
	Tolerances [inch]
Length	+/- 0.025
Head diameter	+0 / -0.011
Head height	+/- 0.004
Thread diameter	+0.005 / -0

Descriere	STP39A 2.5x22.0 - T8
Material	oțel, călit
Exterior	zincat, Nichelat, pasivat negru / nu conține Cr-VI, recopt, ermetizat
Greutate	0.564 kg / 1000 unități

SCREWERK	**STP39A0250220B**	
_Zoll Zeichnung Größe A	Scalarea 3:1	2024-10