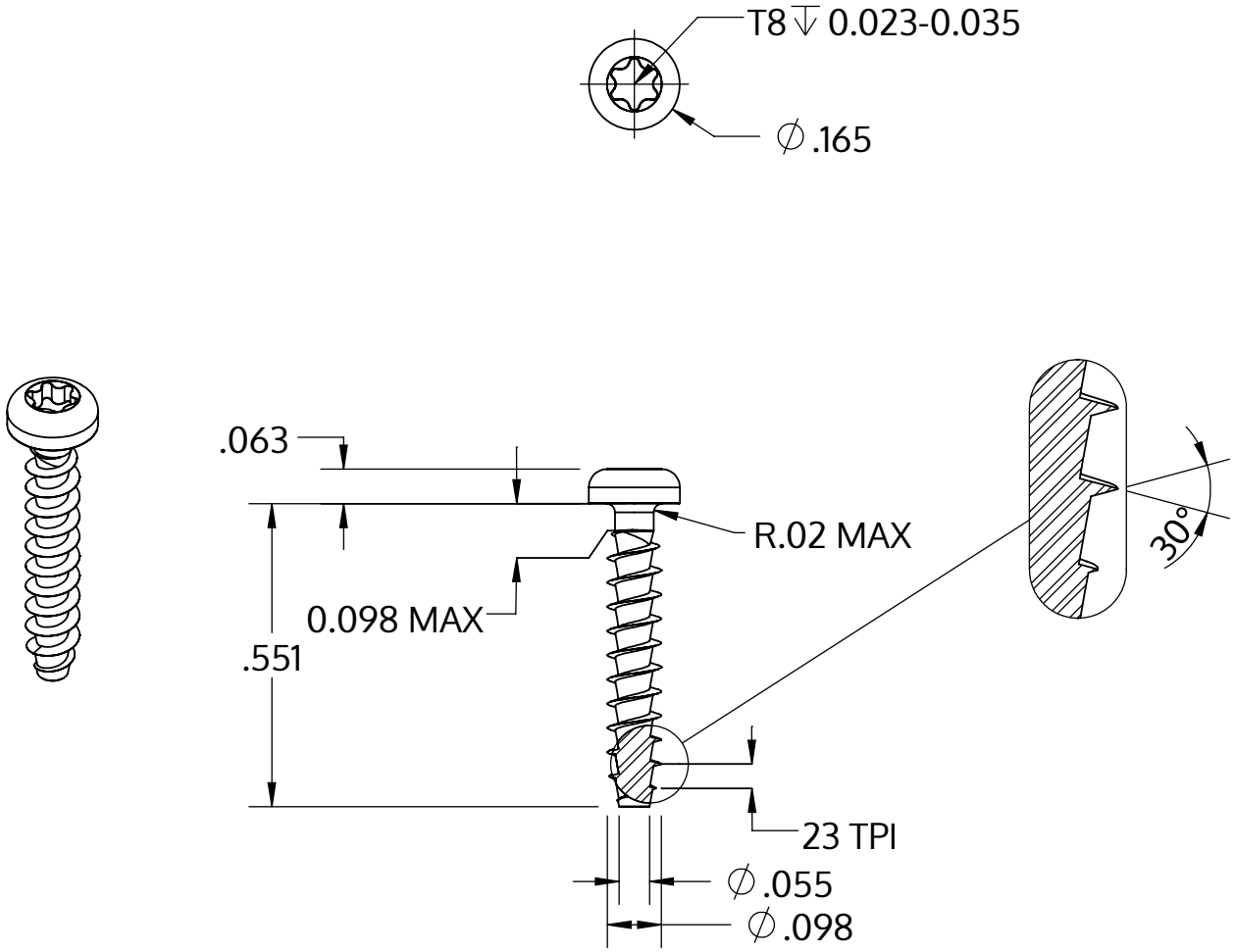

Metric size	M2.5 x 1.12 mm
US size (converted)	#3-23
	Tolerances [inch]
Length	+/- 0.021
Head diameter	+0 / -0.011
Head height	+/- 0.004
Thread diameter	+0.005 / -0

Description	STP39A 2.5x14.0 - T8
Material	steel, hardened
Surface	Zinc-Nickel-plated min. 5µm, passivated black/ Cr-VI-free, baked, sealed
Weight	0.400 kg / 1000 pieces

SCREWERK	**STP39A0250140B**	
Inch Drawing Size A	Scale 3:1	2024-10