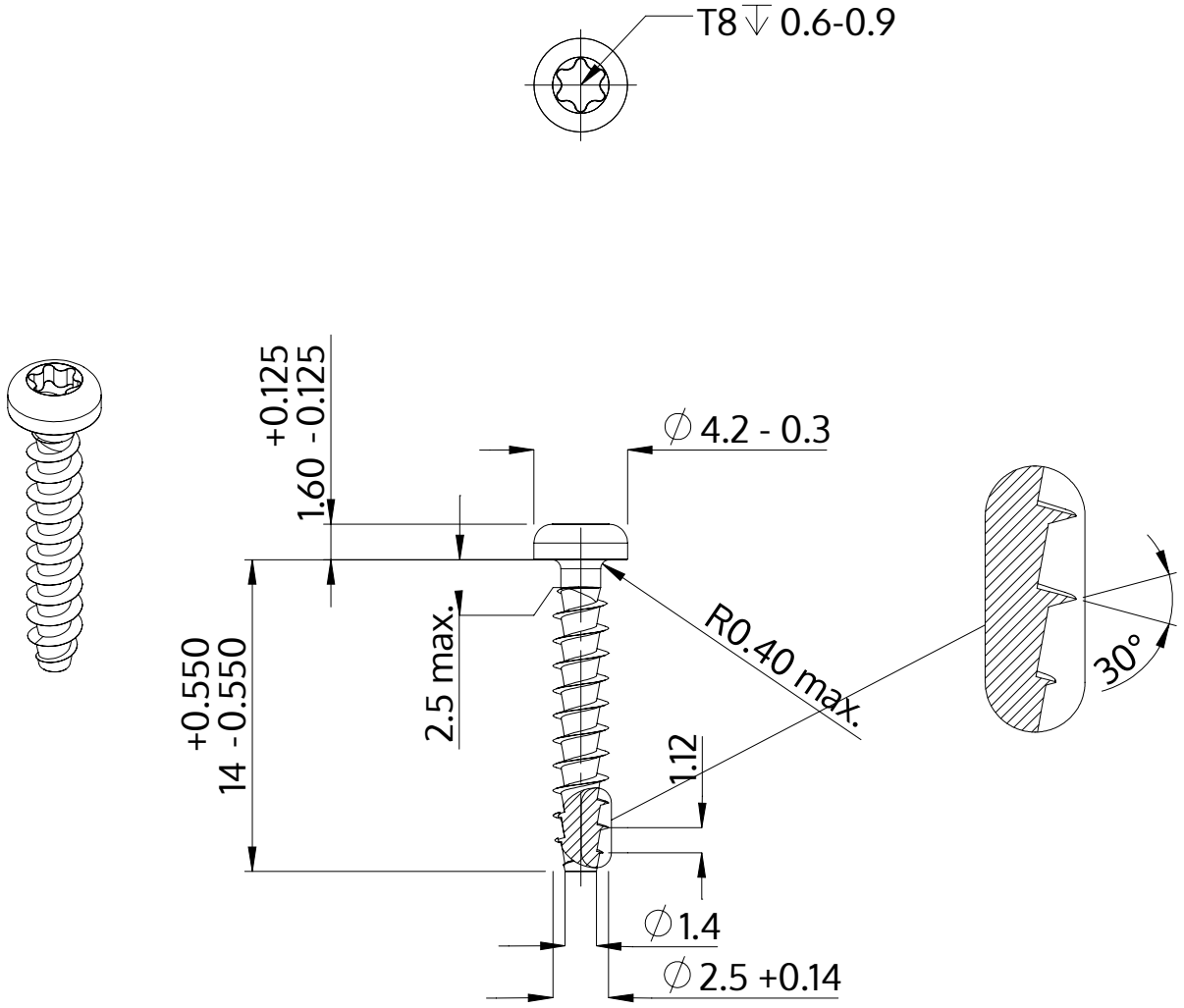


| | |
|---|---|
| Description | STP39A 2.5x14.0 - T8 |
| Material | steel, hardened |
| Surface | Zinc-Nickel-plated min. 5µm, passivated black/ Cr-VI-free, baked, sealed |
| Weight | 0.400 kg / 1000 pieces |

| | | |
|---|---|---|
| SCREWERK | **STP39A0250140B** | |
| Metric Drawing A4 | Scale 3:1 | 2024-10 |