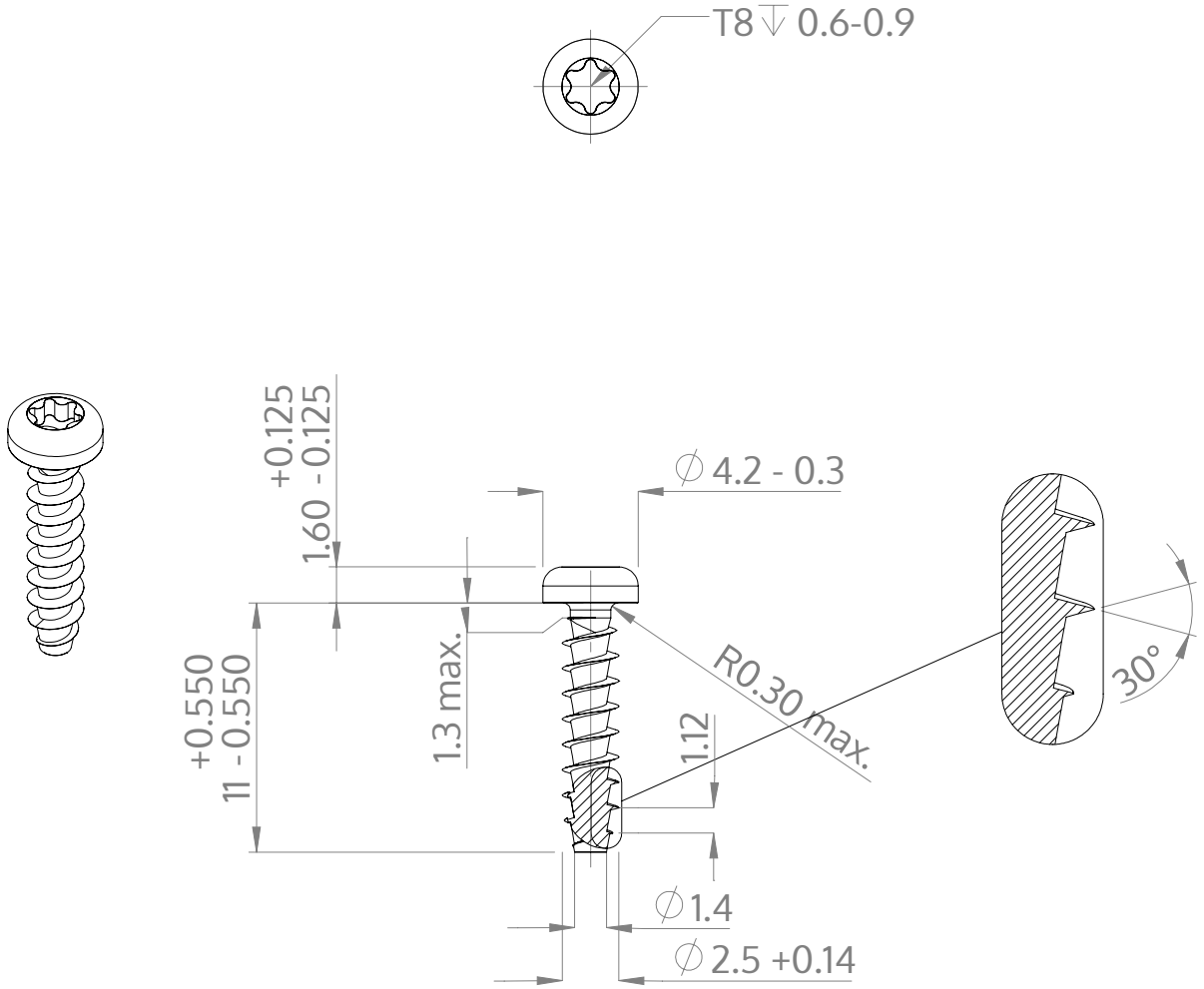

Description	STP39A 2.5x11.0 - T8
Material	stainless-steel A2
Surface	bright, pickled and passivated
Weight	0.338 kg / 1000 pieces

SCREWERK	**STP39A0250110E**	
Metric Drawing A4	Scale 3:1	2025-04