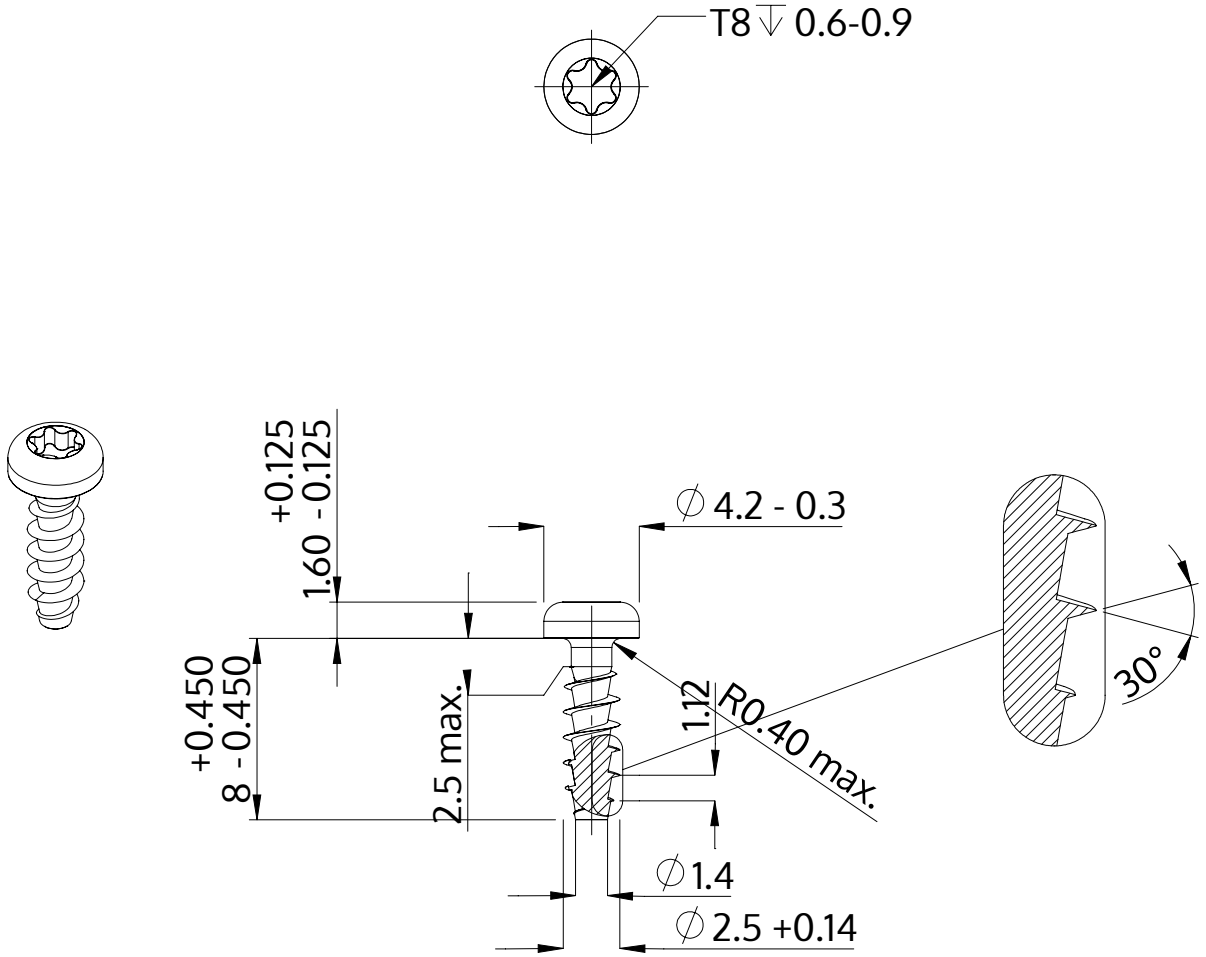

Description	STP39A 2.5x8.0 - T8
Material	steel, hardened
Surface	Zinc-Nickel-plated min. 5µm, passivated black/ Cr-VI-free, baked, sealed
Weight	0.277 kg / 1000 pieces

SCREWERK	**STP39A0250080B**	
Metric Drawing A4	Scale 3:1	2024-10