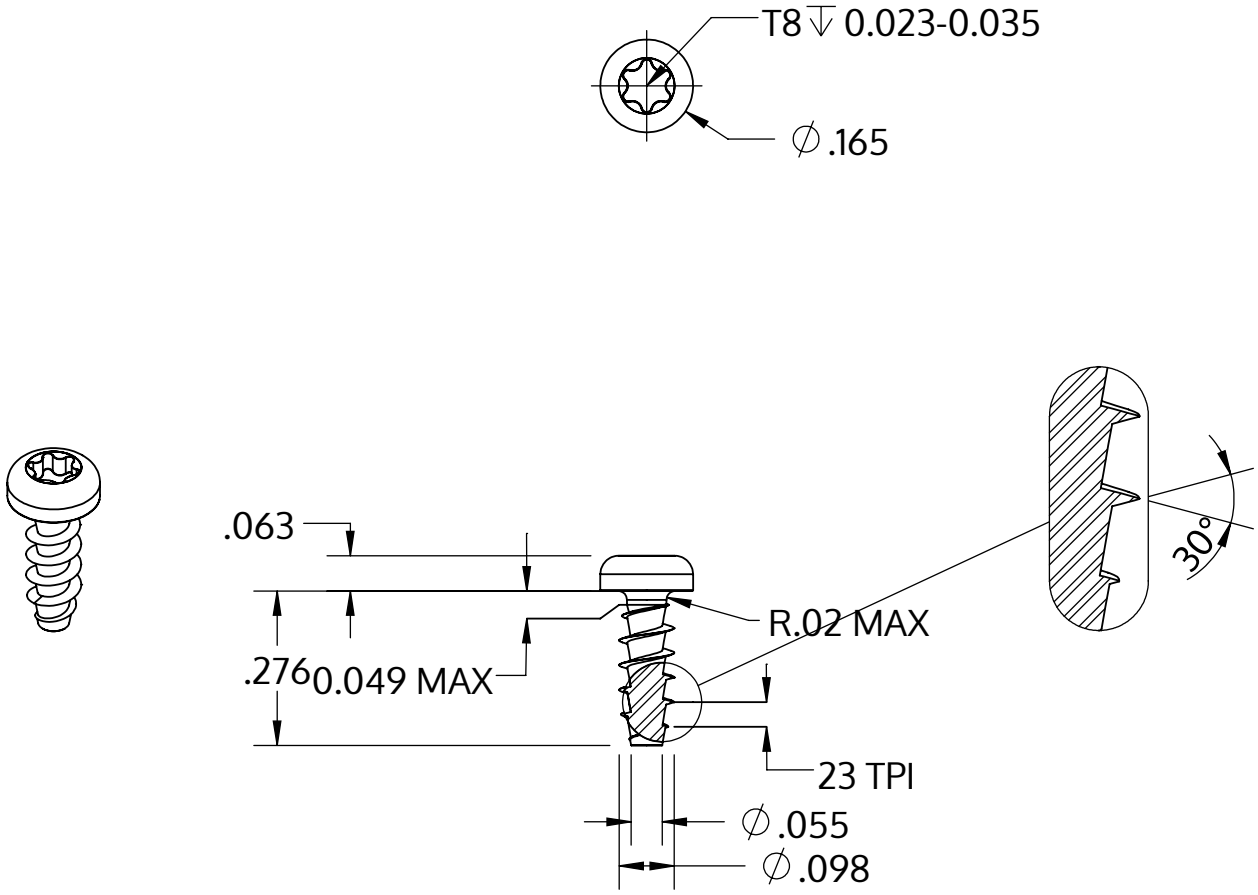


| | |
|---|---|
| Metric size | M2.5 x 1.12 mm |
| US size (converted) | #3-23 |
| | Tolerances [inch] |
| Length | +/- 0.017 |
| Head diameter | +0 / -0.011 |
| Head height | +/- 0.004 |
| Thread diameter | +0.005 / -0 |

| | |
|---|---|
| Beskrivning | STP39A 2.5x7.0 - T8 |
| Material | stål, härdat |
| Yta | ZnNi svart-passiviserad/Cr-VI-fri, härdad, förseglad |
| Vikt | 0.257 kg / 1000 styck |

| | | |
|---|---|---|
| SCREWERK | **STP39A0250070B** | |
| _Zoll Zeichnung Größe A | Skala 3:1 | 2024-10 |