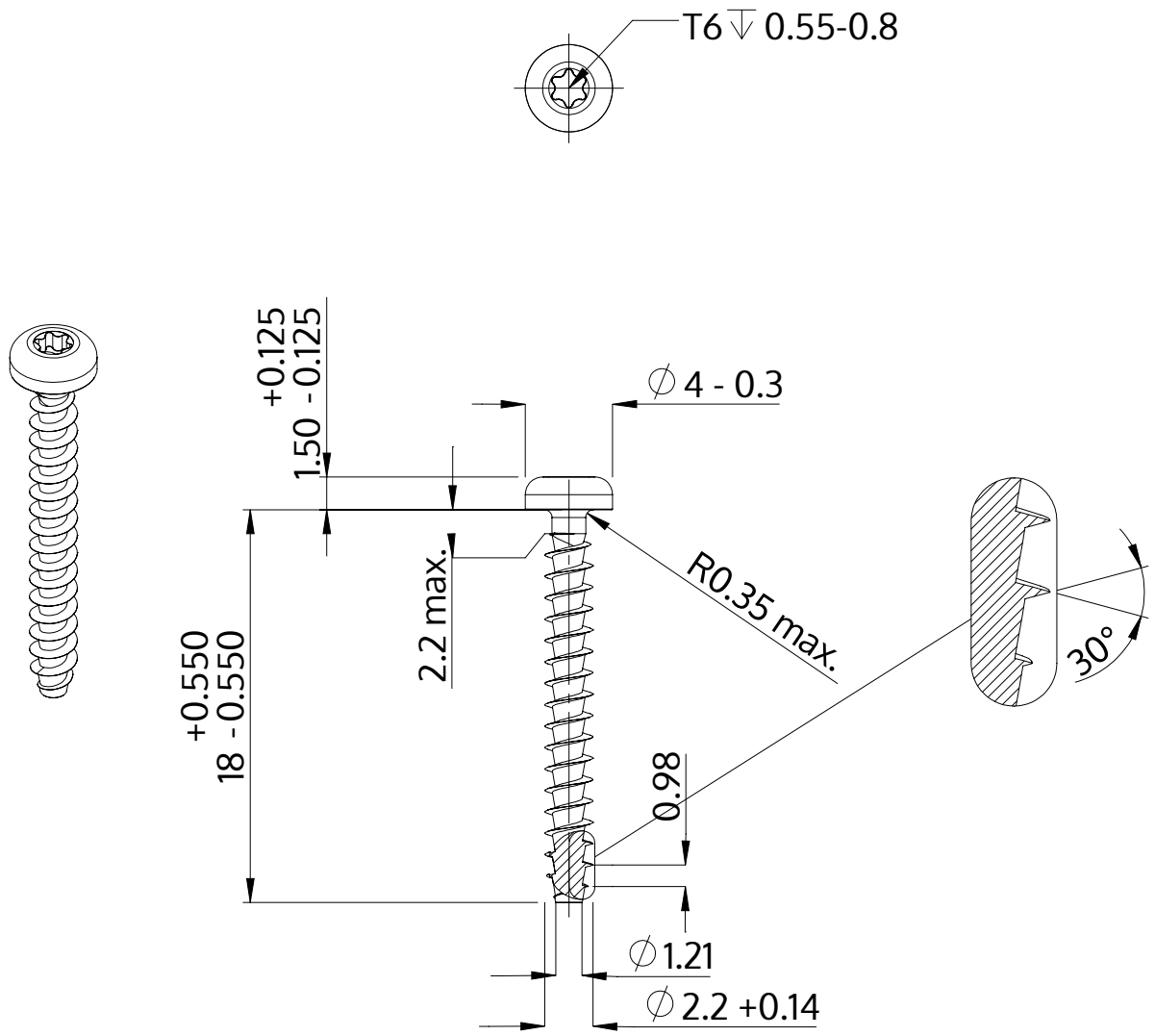

Description	STP39A 2.2x18.0 - T6
Material	stainless-steel A2
Surface	bright, pickled and passivated
Weight	0.393 kg / 1000 pieces

SCREWERK	**STP39A0220180E**	
Metric Drawing A4	Scale None:1	2024-04