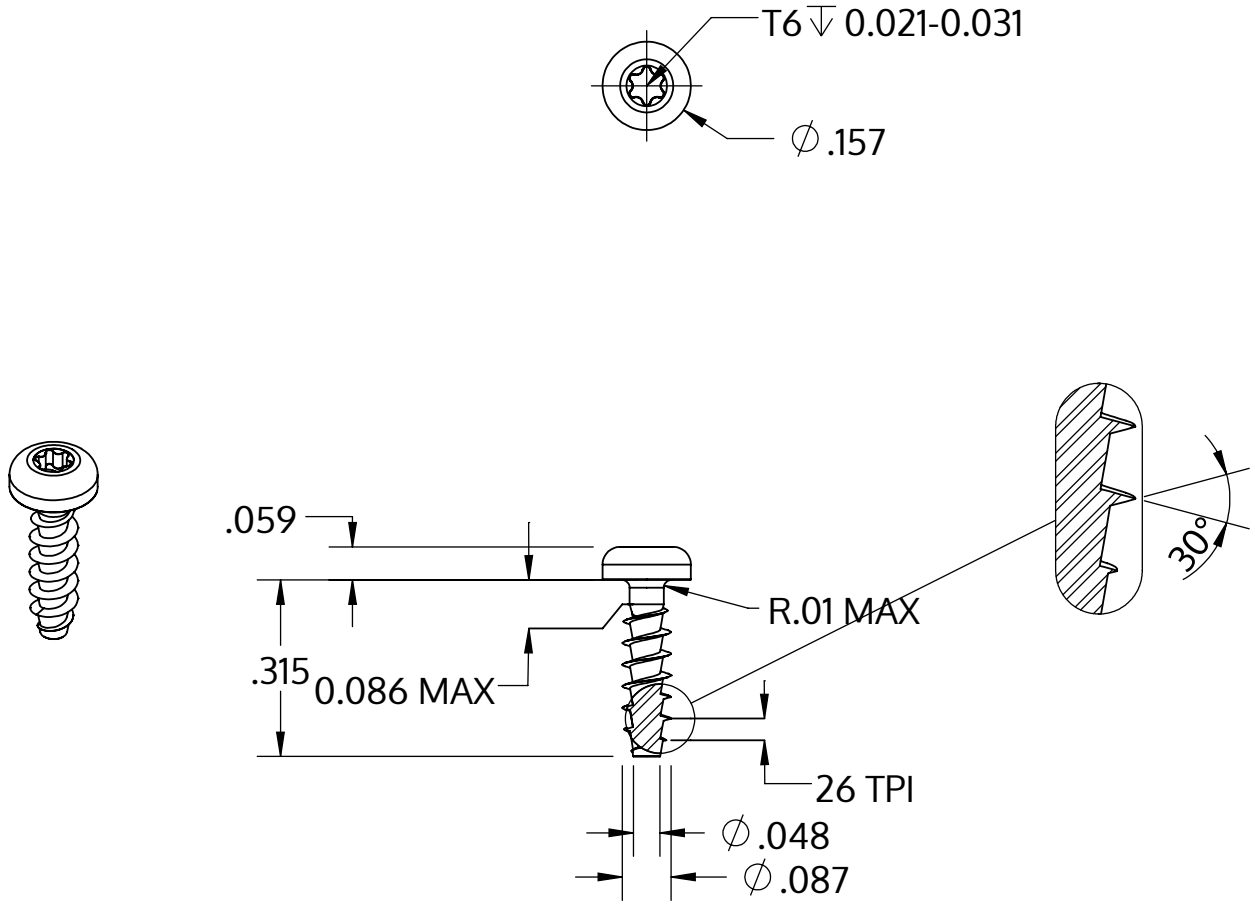

Metric size	M2.2 x 0.98 mm
US size (converted)	#0.086-26
	Tolerances [inch]
Length	+/- 0.017
Head diameter	+0 / -0.011
Head height	+/- 0.004
Thread diameter	+0.005 / -0

Description	STP39A 2.2x8.0 - T6
Matière	acier inoxydable A2
Surface	brillant décapé et passivé
Poids	0.234 kg / 1000 Unité

SCREWERK	**STP39A0220080E**	
_Zoll Zeichnung Größe A	Redimensionner 3:1	2024-10