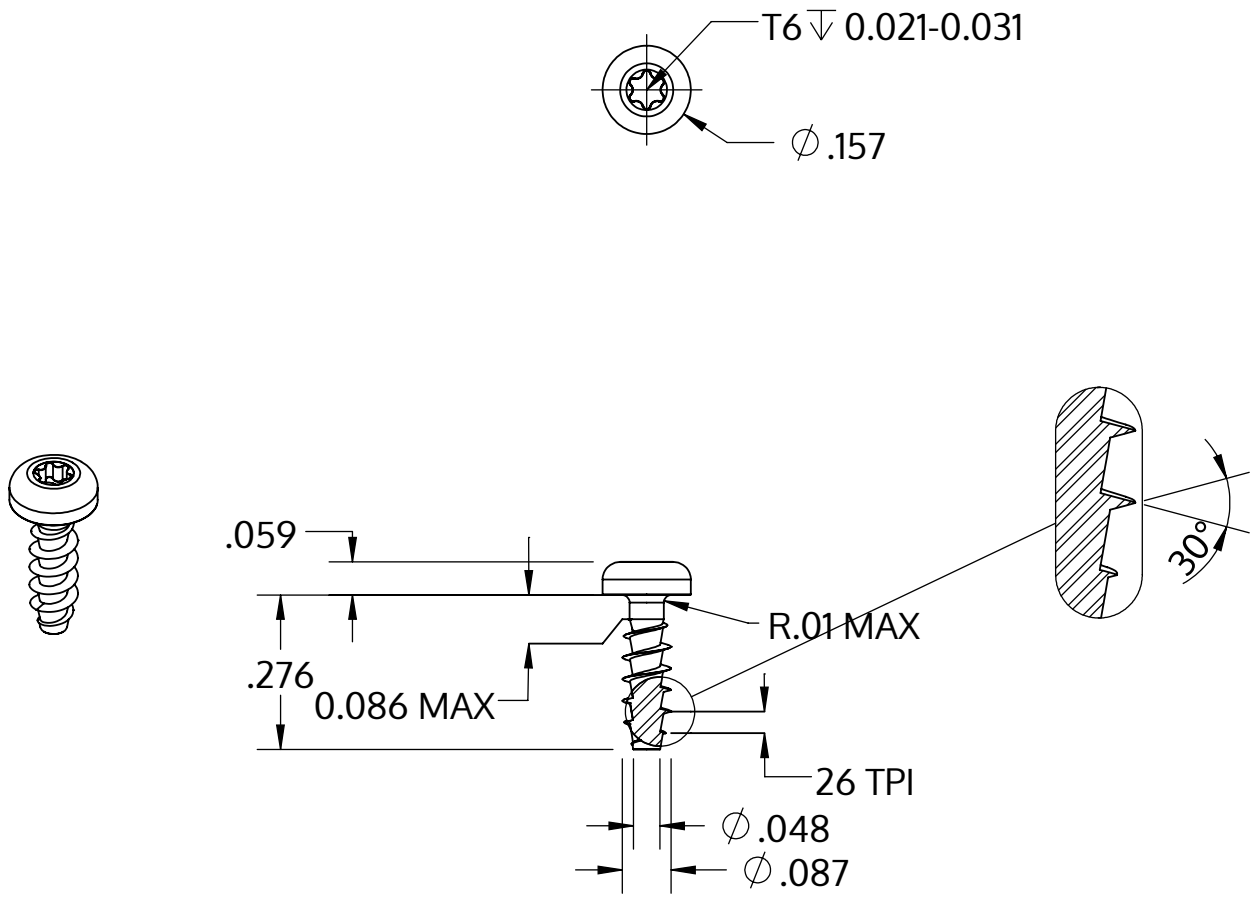

Metric size	M2.2 x 0.98 mm
US size (converted)	#0.086-26
	Tolerances [inch]
Length	+/- 0.017
Head diameter	+0 / -0.011
Head height	+/- 0.004
Thread diameter	+0.005 / -0

Descriere	STP39A 2.2x7.0 - T6
Material	oţel inoxidabil A2
Exterior	neacoperit, murat și pasivat
Greutate	0.218 kg / 1000 unități

SCREWERK	**STP39A0220070E**	
_Zoll Zeichnung Größe A	Scalarea 3:1	2024-10