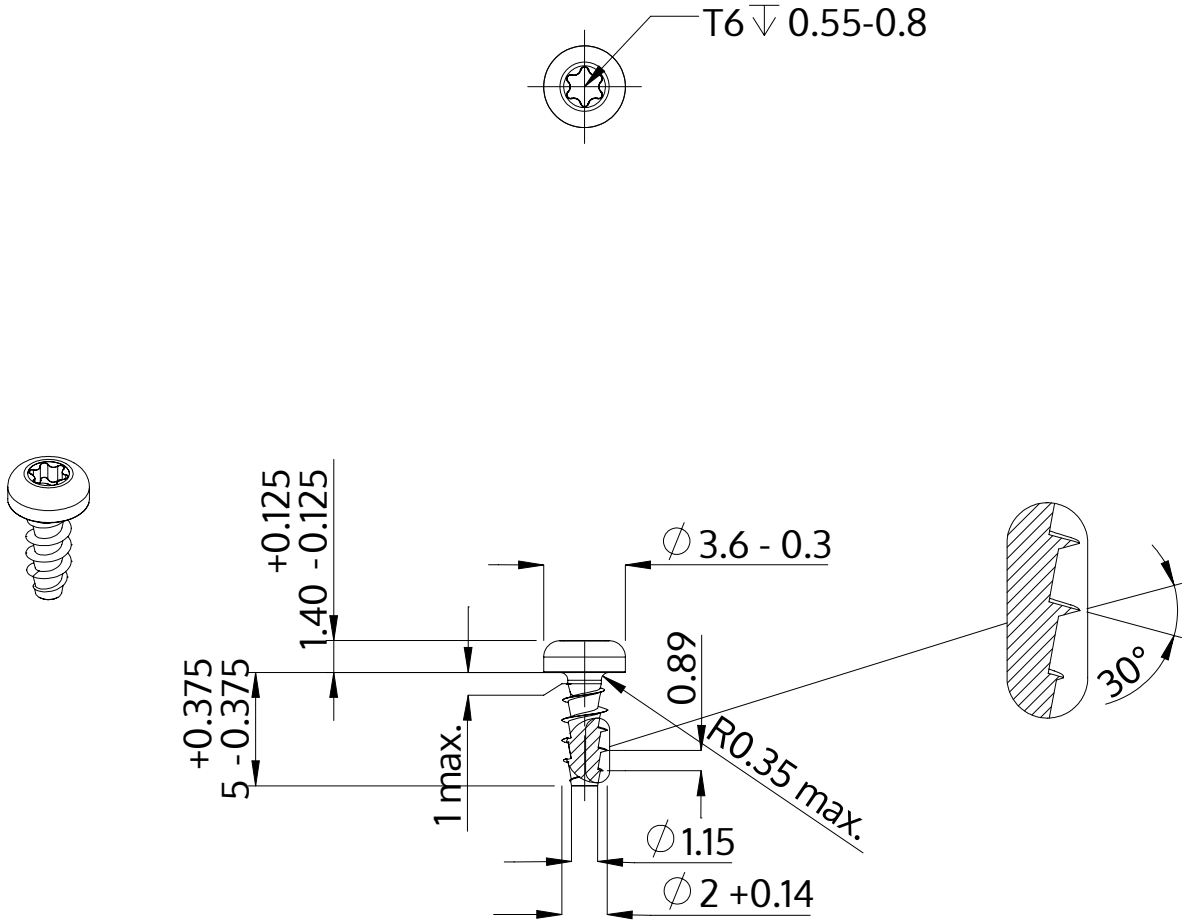


| | |
|---|---|
| Description | STP39A 2.0x5.0 - T6 |
| Material | steel, hardened |
| Surface | zinc-plated 5-7 µm, baked, blue / transparent passivated |
| Weight | 0.141 kg / 1000 pieces |

| | | |
|---|---|---|
| SCREWERK | **STP39A0200050S** | |
| Metric Drawing A4 | Scale 3:1 | 2024-10 |