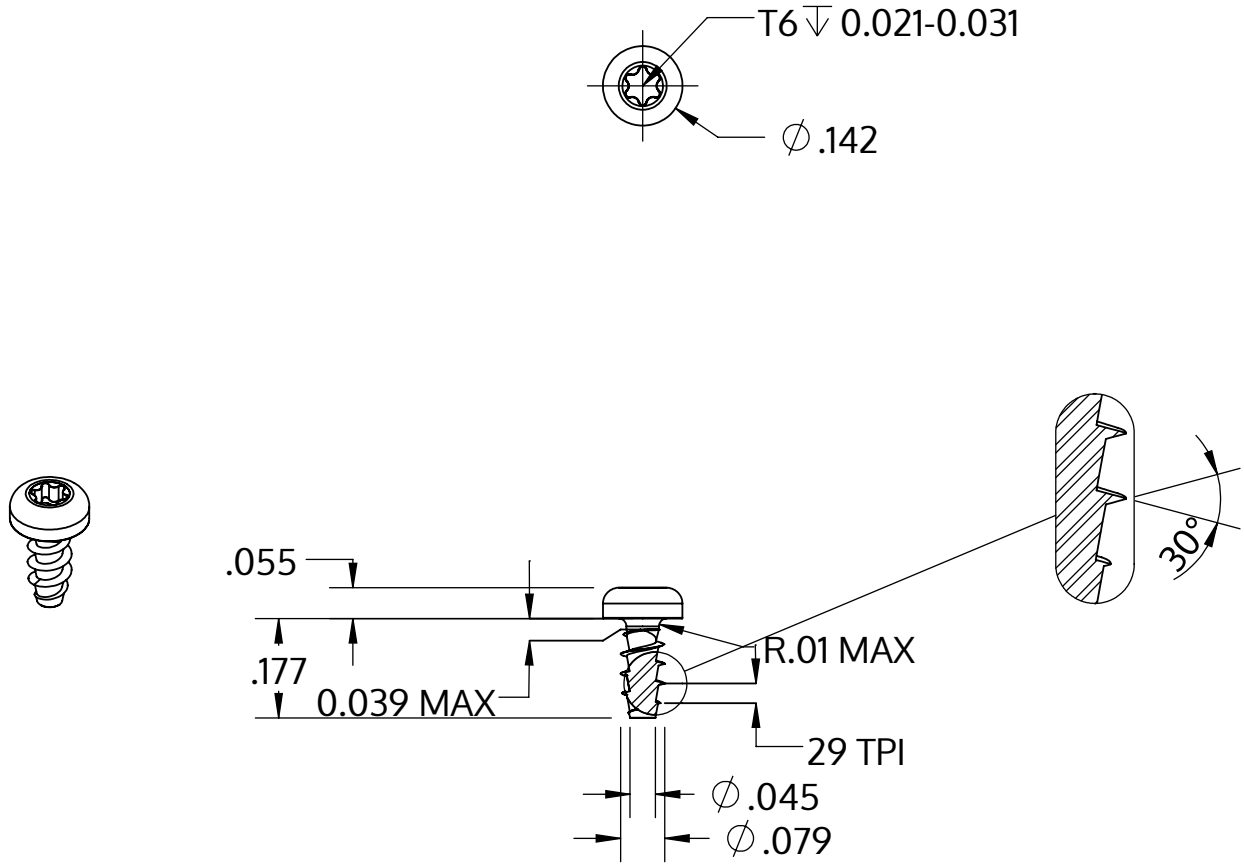


| | |
|---|---|
| Metric size | M2 x 0.89 mm |
| US size (converted) | #1.5-29 |
| | Tolerances [inch] |
| Length | +/- 0.014 |
| Head diameter | +0 / -0.011 |
| Head height | +/- 0.004 |
| Thread diameter | +0.005 / -0 |

| | |
|---|---|
| Description | STP39A 2.0x4.5 - T6 |
| Matière | acier inoxydable A2 |
| Surface | brillant décapé et passivé |
| Poids | 0.134 kg / 1000 Unité |

| | | |
|---|---|---|
| SCREWERK | **STP39A0200045E** | |
| _Zoll Zeichnung Größe A | Redimensionner 3:1 | 2024-10 |