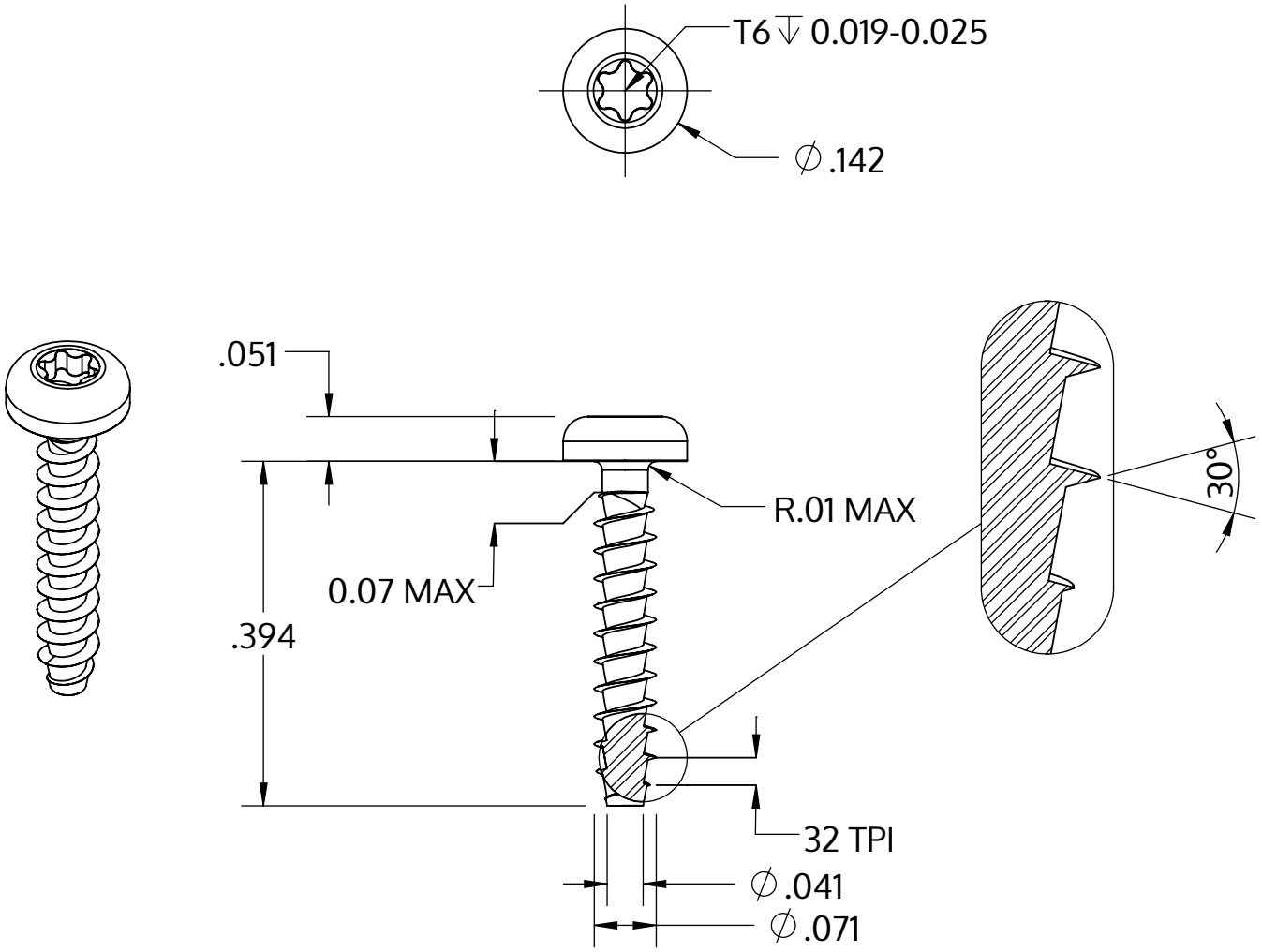


| | |
|---|---|
| Metric size | M1.8 x 0.8 mm |
| US size (converted) | #1-32 |
| | Tolerances [inch] |
| Length | +/- 0.017 |
| Head diameter | +0 / -0.011 |
| Head height | +/- 0.004 |
| Thread diameter | +0.005 / -0 |

| | |
|---|---|
| Opis | STP39A 1.8x10.0 - T6 |
| Materiał | Stal, hartowana |
| Powierzchnia | Ocynkowana 5-7 µm, temperowana, pasywowana na niebiesko |
| Waga | 0.193 kg / 1000 sztuk |

| | | |
|---|---|---|
| SCREWERK | **STP39A0180100S** | |
| _Zoll Zeichnung Größe A | Skala 5:1 | 2024-10 |