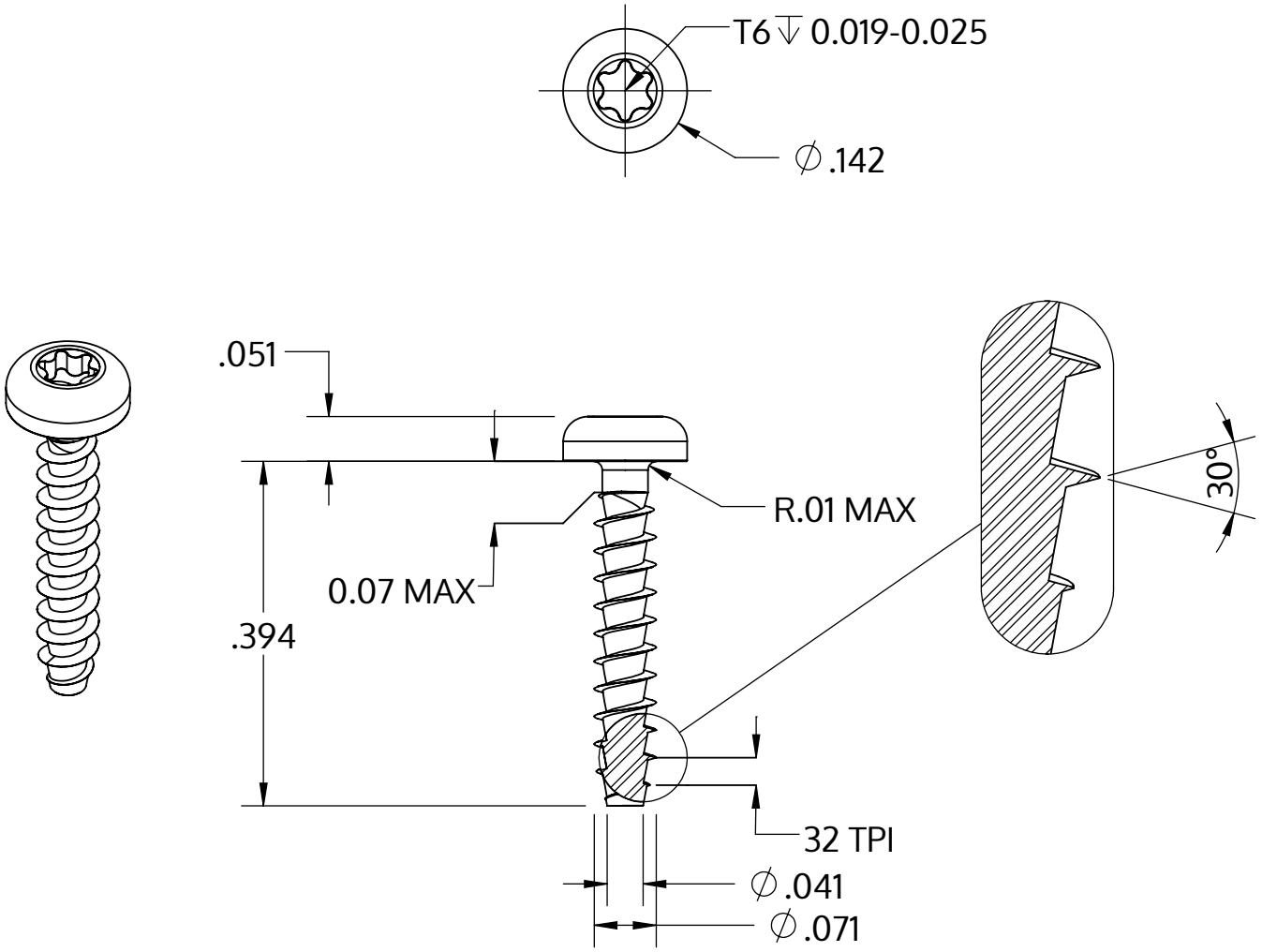


| | |
|---|---|
| Metric size | M1.8 x 0.8 mm |
| US size (converted) | #1-32 |
| | Tolerances [inch] |
| Length | +/- 0.017 |
| Head diameter | +0 / -0.011 |
| Head height | +/- 0.004 |
| Thread diameter | +0.005 / -0 |

| | |
|---|---|
| Description | STP39A 1.8x10.0 - T6 |
| Material | steel, hardened |
| Surface | Zinc-Nickel-plated min. 5µm, passivated black/ Cr-VI-free, baked, sealed |
| Weight | 0.193 kg / 1000 pieces |

| | | |
|---|---|---|
| SCREWERK | **STP39A0180100B** | |
| Inch Drawing Size A | Scale 5:1 | 2024-10 |