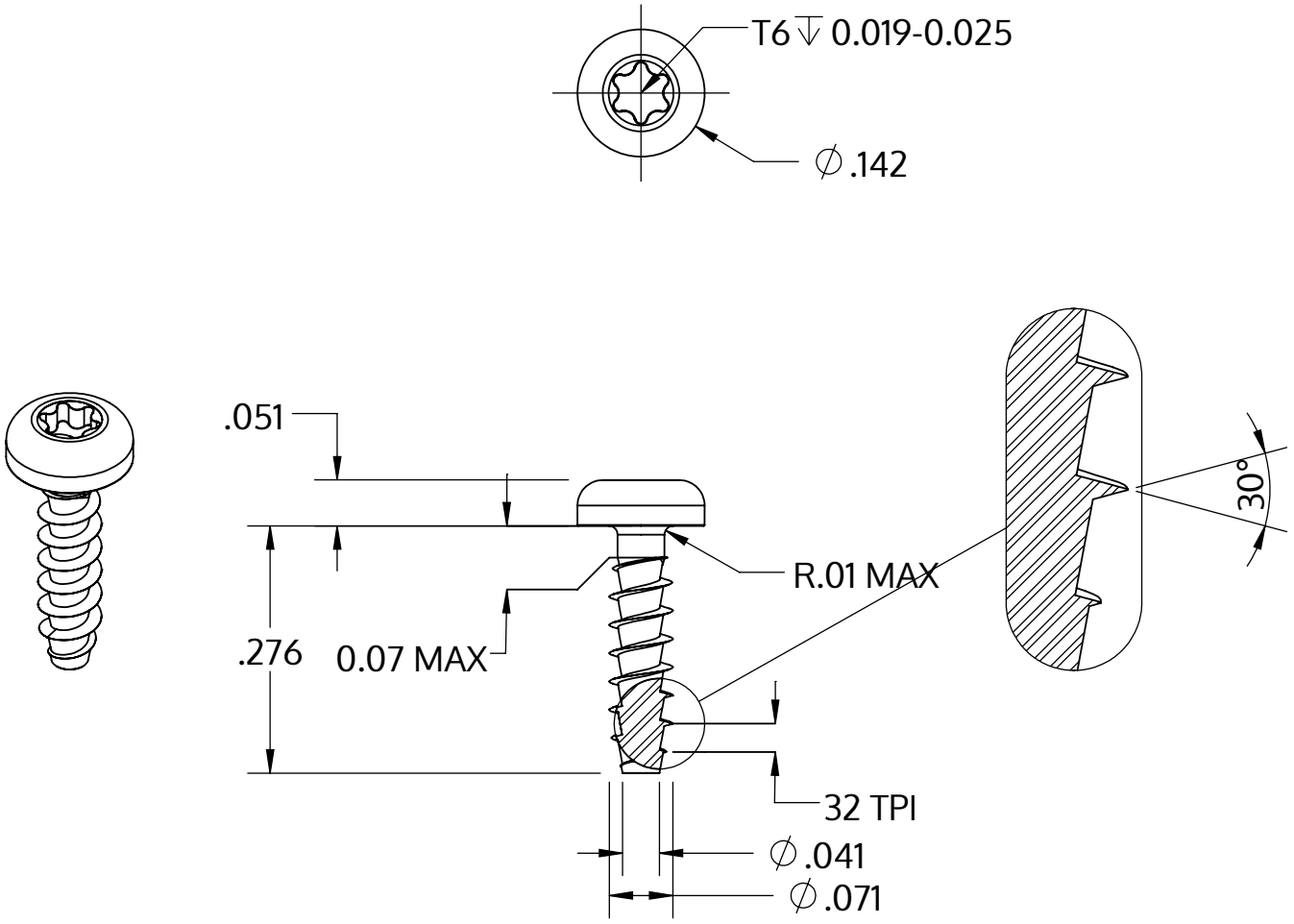

Metric size	M1.8 x 0.8 mm
US size (converted)	#1-32
	Tolerances [inch]
Length	+/- 0.017
Head diameter	+0 / -0.011
Head height	+/- 0.004
Thread diameter	+0.005 / -0

Descriere	STP39A 1.8x7.0 - T6
Material	oțel, călit
Exterior	zincat 5-7 µm, recopt, pasivat transparent/albastru
Greutate	0.155 kg / 1000 unități

SCREWERK	**STP39A0180070S**	
_Zoll Zeichnung Größe A	Scalarea 5:1	2024-05