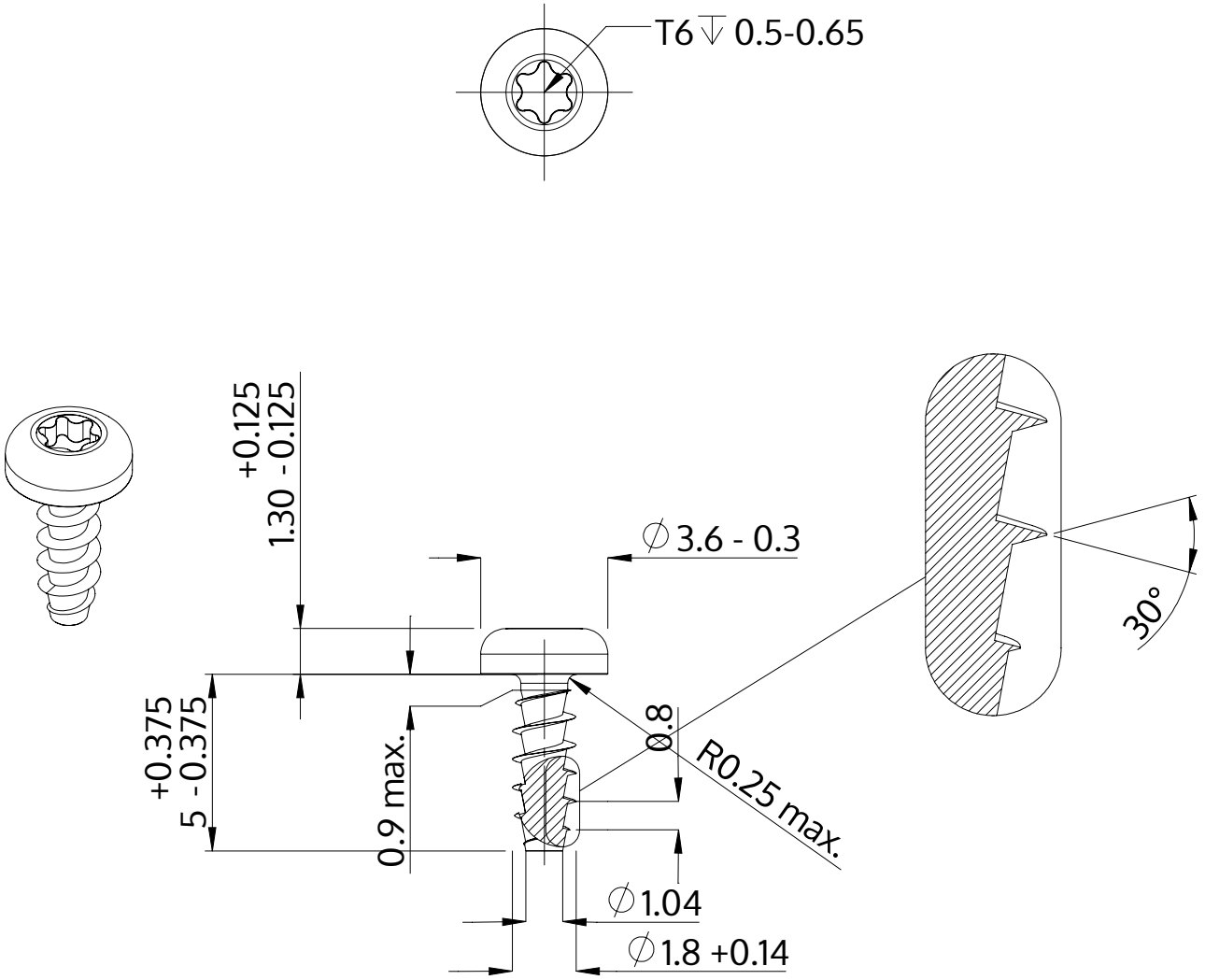

Description	STP39A 1.8x5.0 - T6
Material	stainless-steel A2
Surface	bright, pickled and passivated
Weight	0.130 kg / 1000 pieces

SCREWERK	**STP39A0180050E**	
Metric Drawing A4	Scale None:1	2024-04