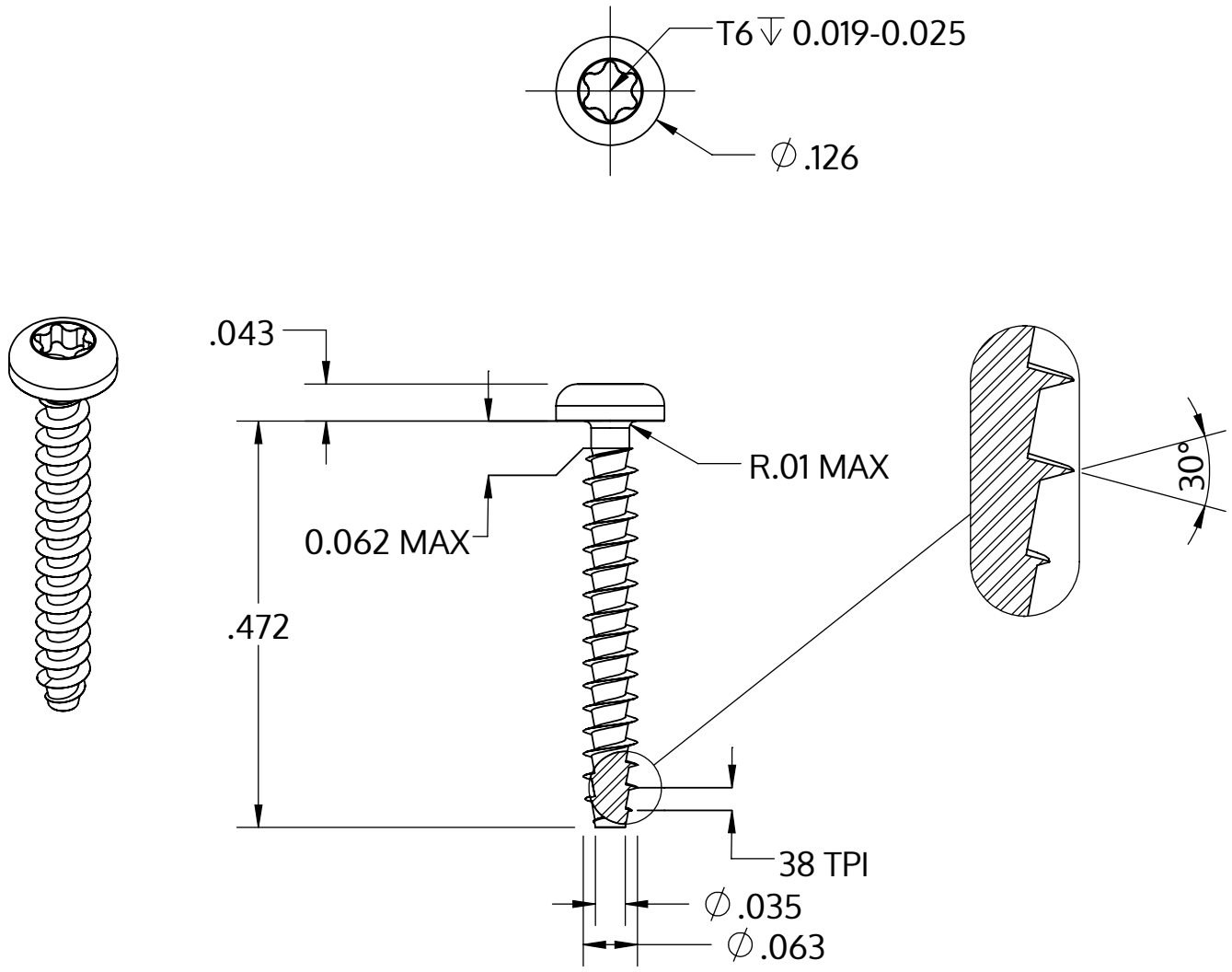

Metric size	M1.6 x 0.67 mm
US size (converted)	#0.062-38
	Tolerances [inch]
Length	+/- 0.021
Head diameter	+0 / -0.011
Head height	+/- 0.004
Thread diameter	+0.005 / -0

Descriere	STP39A 1.6x12.0 - T6
Material	oţel inoxidabil A2
Exterior	neacoperit, murat și pasivat
Greutate	0.157 kg / 1000 unități

SCREWERK	**STP39A0160120E**	
_Zoll Zeichnung Größe A	Scalarea 5:1	2024-10