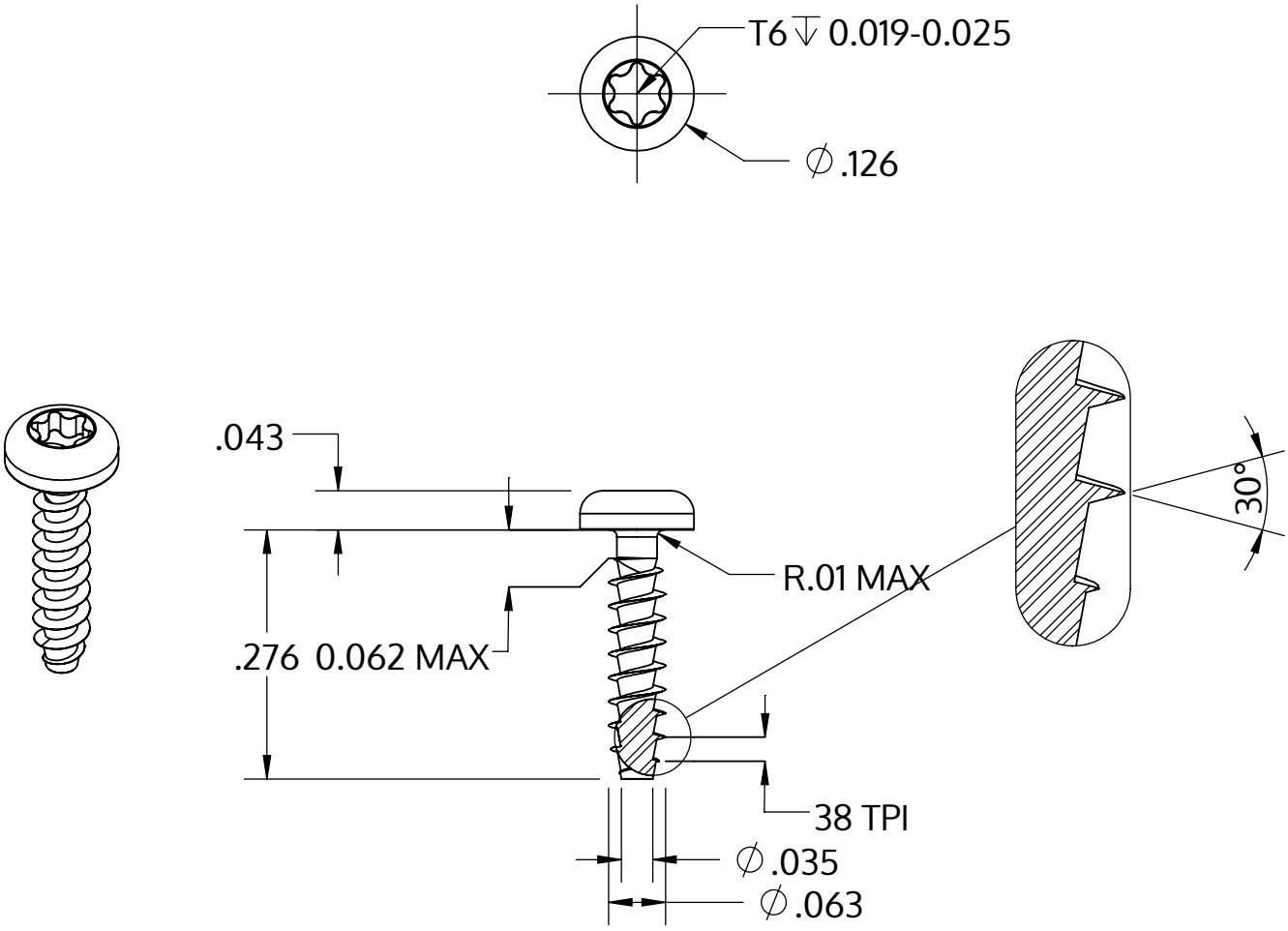

Metric size	M1.6 x 0.67 mm
US size (converted)	#0.062-38
	Tolerances [inch]
Length	+/- 0.017
Head diameter	+0 / -0.011
Head height	+/- 0.004
Thread diameter	+0.005 / -0

Description	STP39A 1.6x7.0 - T6
Material	stainless-steel A2
Surface	bright, pickled and passivated
Weight	0.111 kg / 1000 pieces

SCREWERK	**STP39A0160070E**	
Inch Drawing Size A	Scale 5:1	2024-10