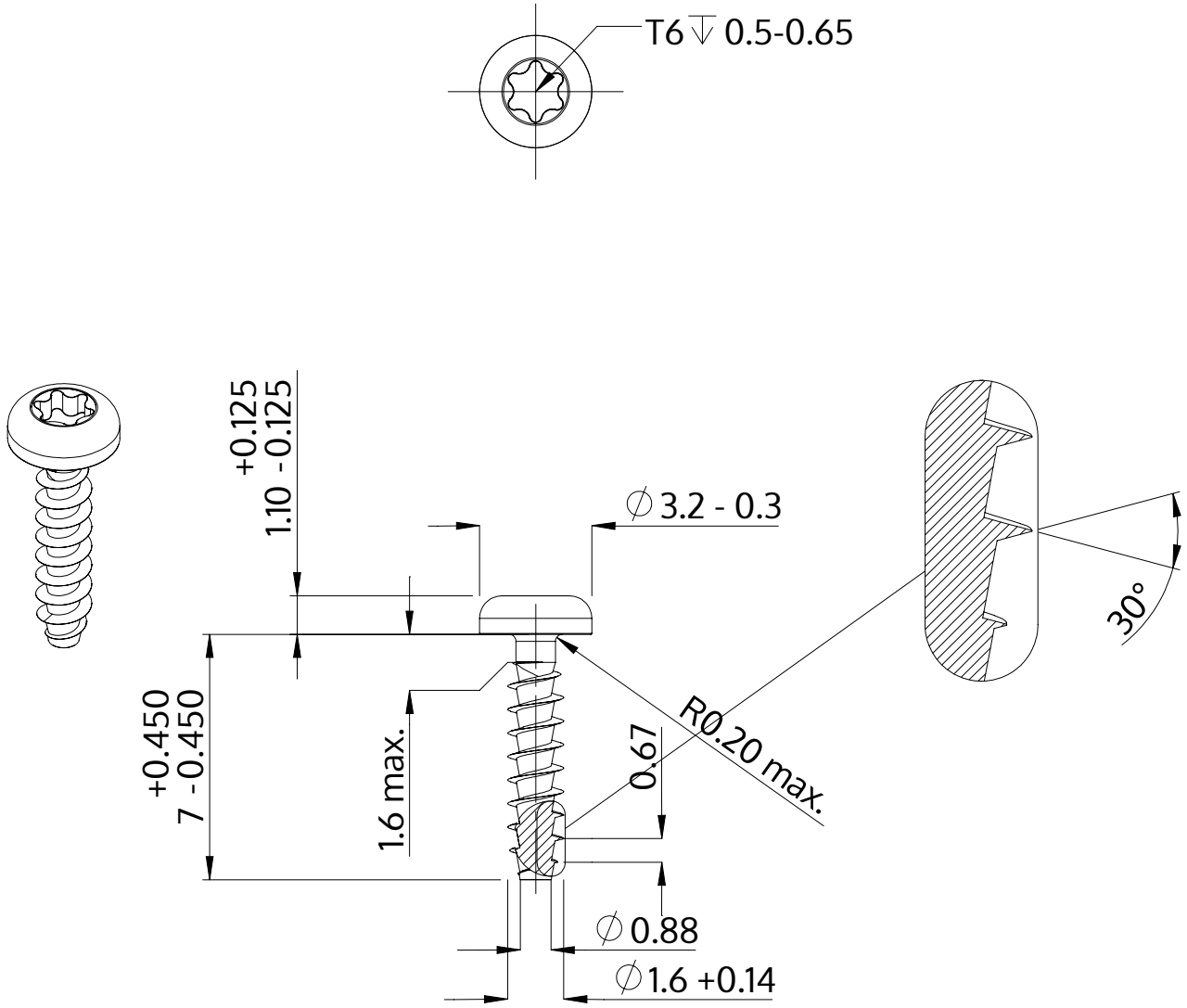

Description	STP39A 1.6x7.0 - T6
Material	stainless-steel A2
Surface	bright, pickled and passivated
Weight	0.111 kg / 1000 pieces

SCREWERK	**STP39A0160070E**	
Metric Drawing A4	Scale 5:1	2024-10