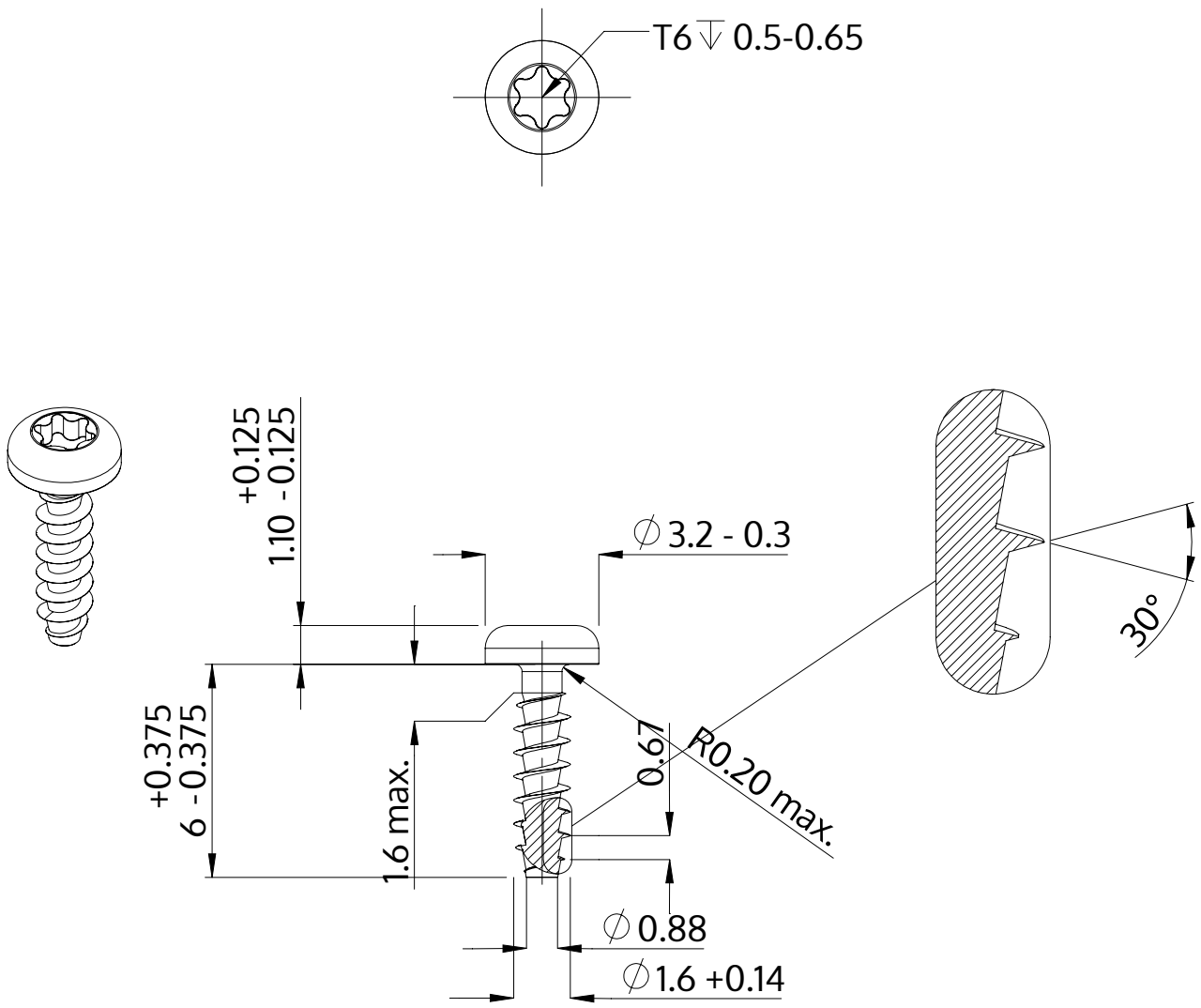

Description	STP39A 1.6x6.0 - T6
Material	steel, hardened
Surface	zinc-plated 5-7 µm, baked, blue / transparent passivated
Weight	0.102 kg / 1000 pieces

SCREWERK	**STP39A0160060S**	
Metric Drawing A4	Scale None:1	2024-04