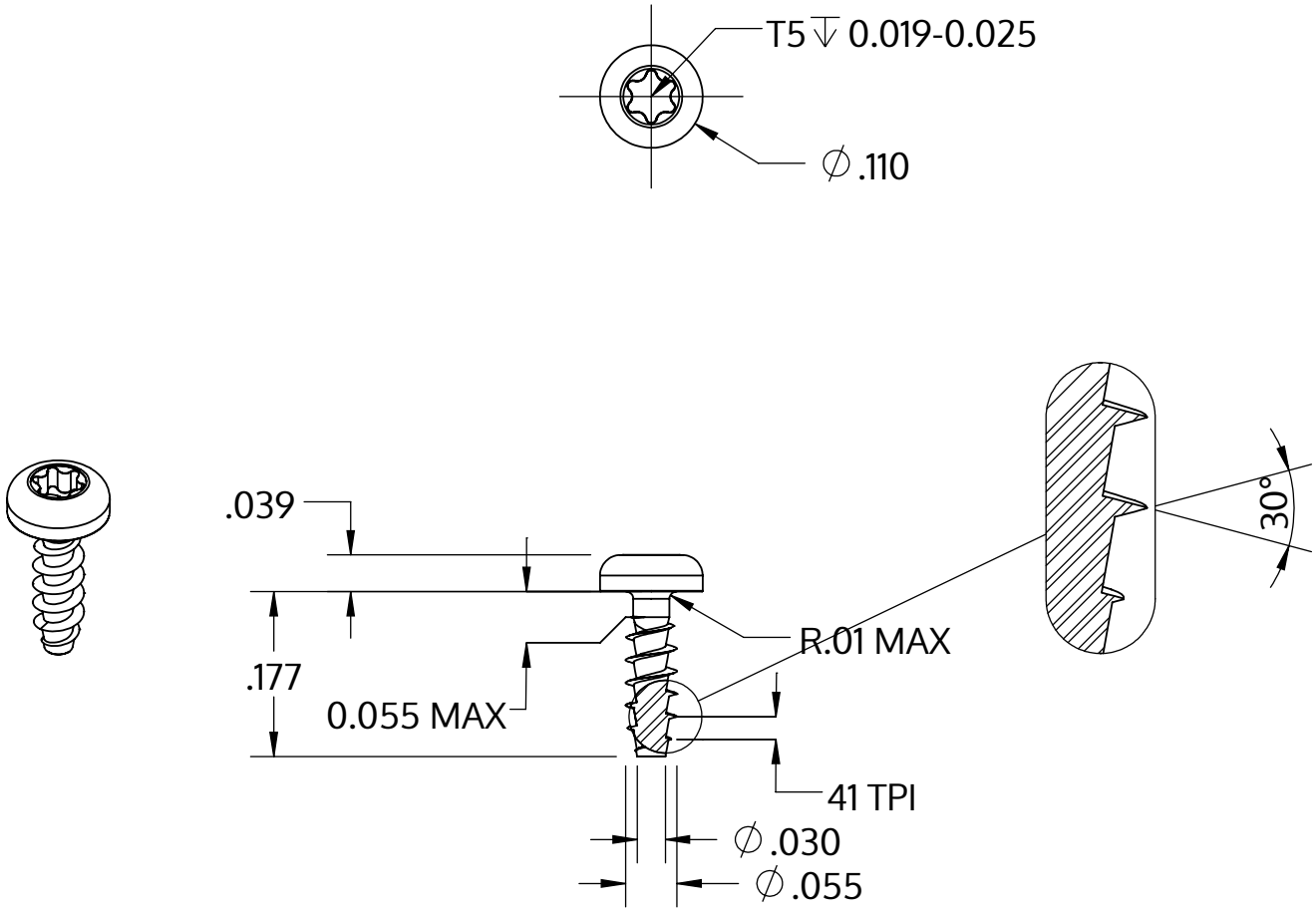

Metric size	M1.4 x 0.62 mm
US size (converted)	#0.055-41
	Tolerances [inch]
Length	+/- 0.014
Head diameter	+0 / -0.009
Head height	+/- 0.004
Thread diameter	+0.005 / -0

Descriere	STP39A 1.4x4.5 - T5
Material	oţel inoxidabil A2
Exterior	neacoperit, murat și pasivat
Greutate	0.064 kg / 1000 unități

SCREWERK	**STP39A0140045E**	
_Zoll Zeichnung Größe A	Scalarea 5:1	2024-10