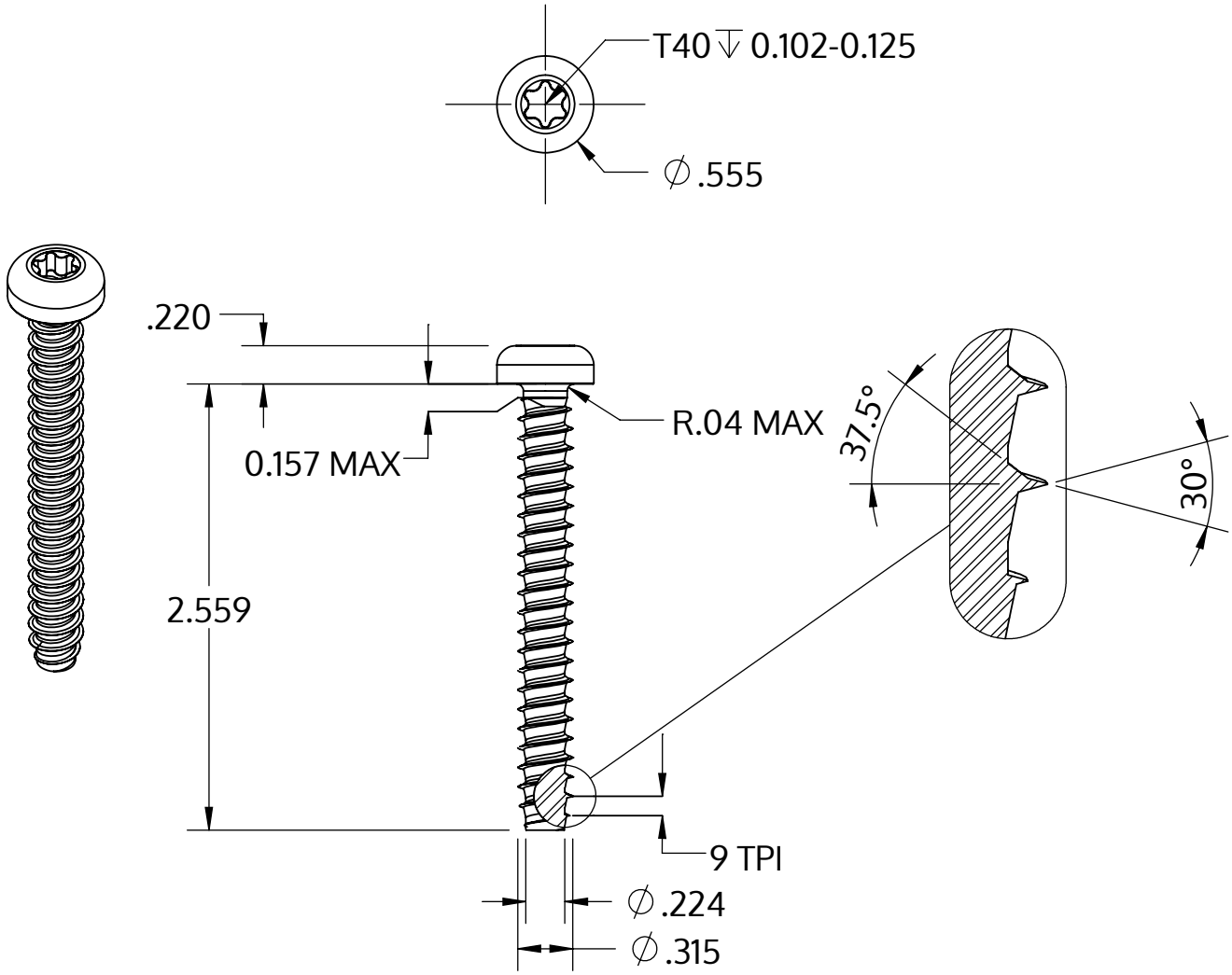

Metric size	M8 x 2.82 mm
US size (converted)	#0.314-9
	Tolerances [inch]
Length	+/- 0.037
Head diameter	+0 / -0.016
Head height	+/- 0.005
Thread diameter	+0.007 / -0

Descrizione	STP39 8.0x65.0 - T40
Materiale	acciaio inossidabile A2
Superficie	bianco-decapato e passivato
Peso	20.785 kg / 1000 pezzi

SCREWERK	**STP390800650E**	
_Zoll Zeichnung Größe A	Scala None:1	2024-04