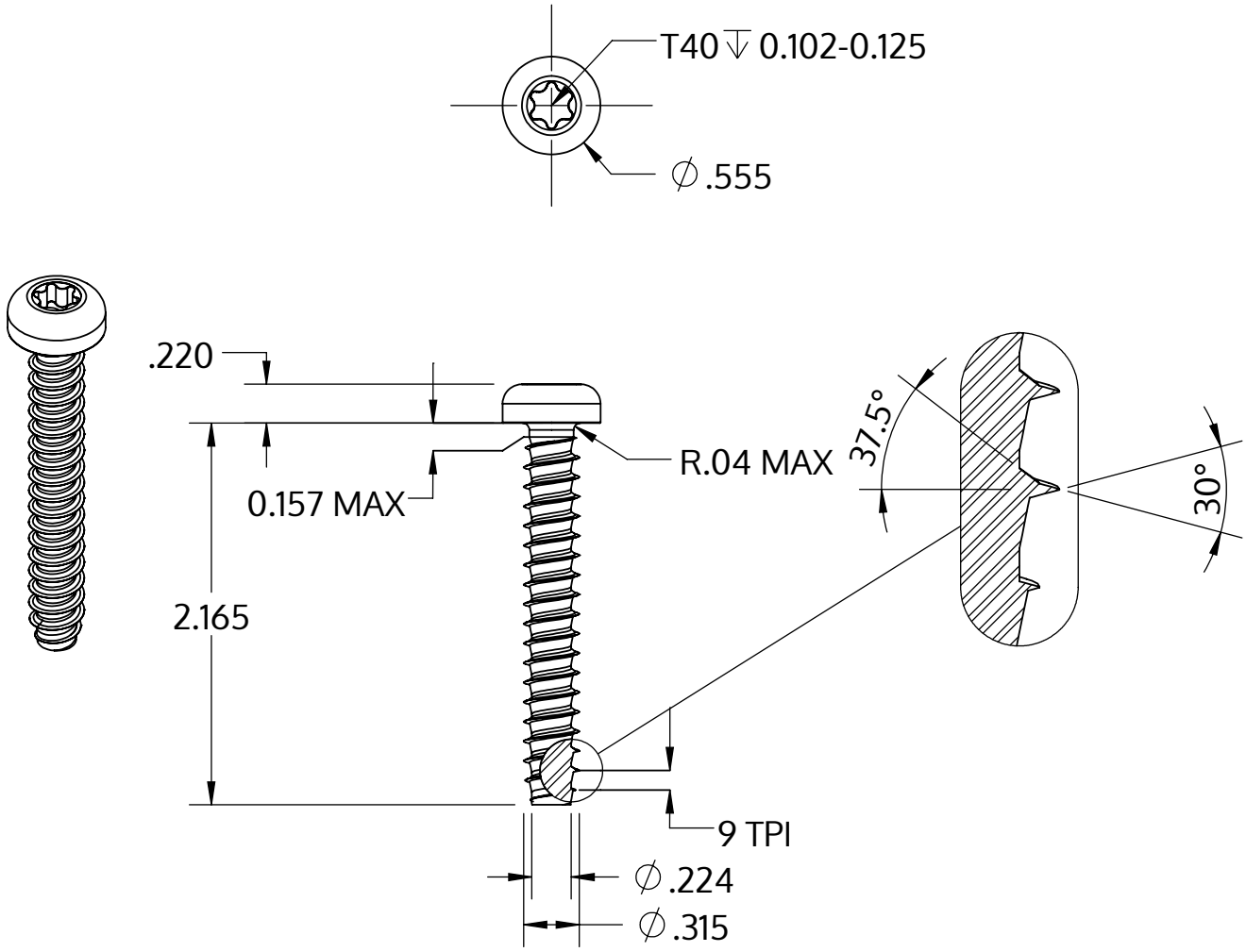

Metric size	M8 x 2.82 mm
US size (converted)	#0.314-9
	Tolerances [inch]
Length	+/- 0.037
Head diameter	+0 / -0.016
Head height	+/- 0.005
Thread diameter	+0.007 / -0

Description	STP39 8.0x55.0 - T40
Matière	acier inoxydable A2
Surface	brillant décapé et passivé
Poids	18.376 kg / 1000 Unité

SCREWERK	**STP390800550E**	
_Zoll Zeichnung Größe A	Redimensionner 1:1	2024-10