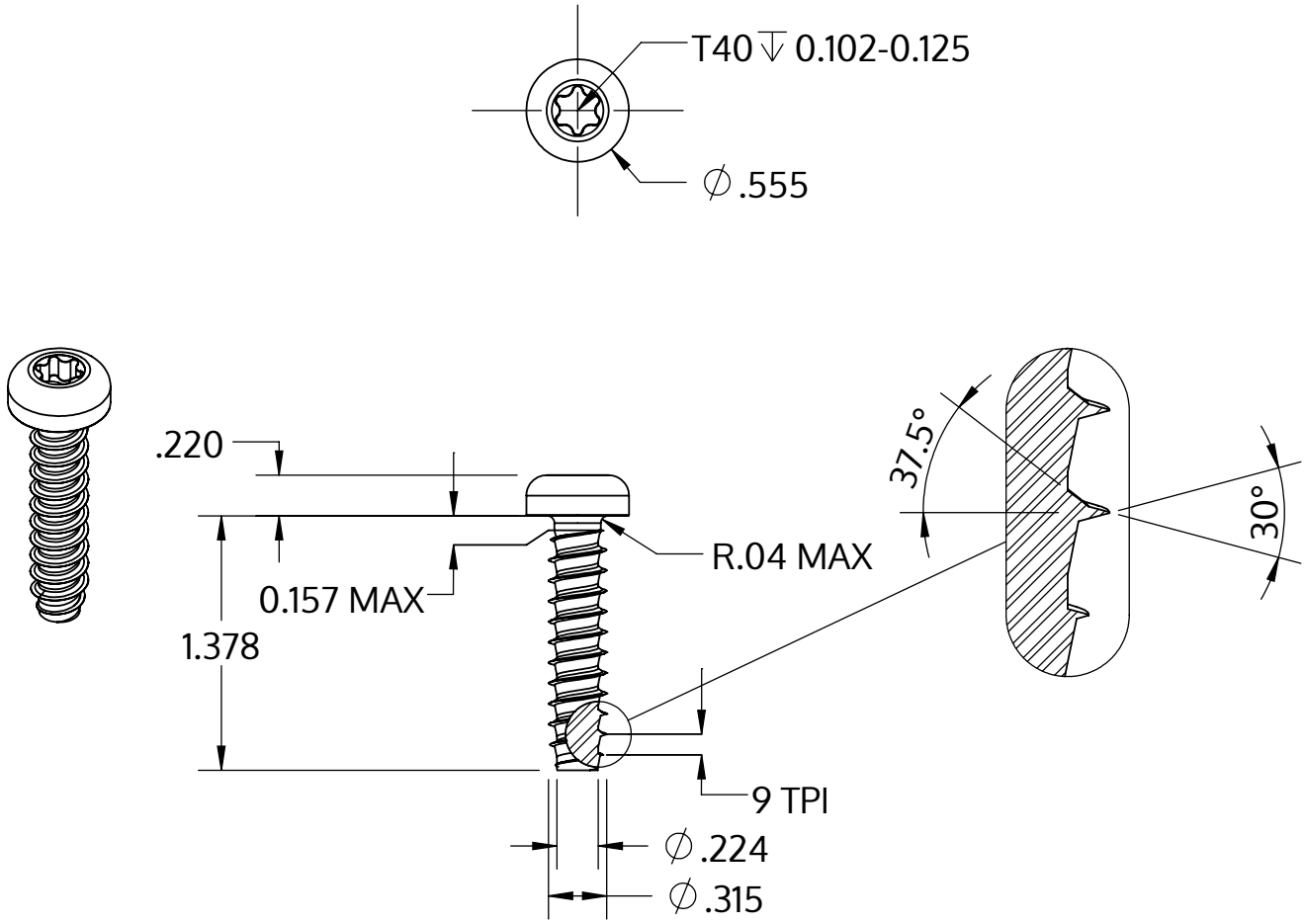


| | |
|---|---|
| Metric size | M8 x 2.82 mm |
| US size (converted) | #0.314-9 |
| | Tolerances [inch] |
| Length | +/- 0.031 |
| Head diameter | +0 / -0.016 |
| Head height | +/- 0.005 |
| Thread diameter | +0.007 / -0 |

| | |
|---|---|
| Beskrivning | STP39 8.0x35.0 - T40 |
| Material | stål, härdat |
| Yta | ZnNi svart-passiviserad/Cr-VI-fri, härdad, förseglad |
| Vikt | 13.559 kg / 1000 styck |

| | | |
|---|---|---|
| SCREWERK | **STP390800350B** | |
| _Zoll Zeichnung Größe A | Skala 1:1 | 2024-10 |