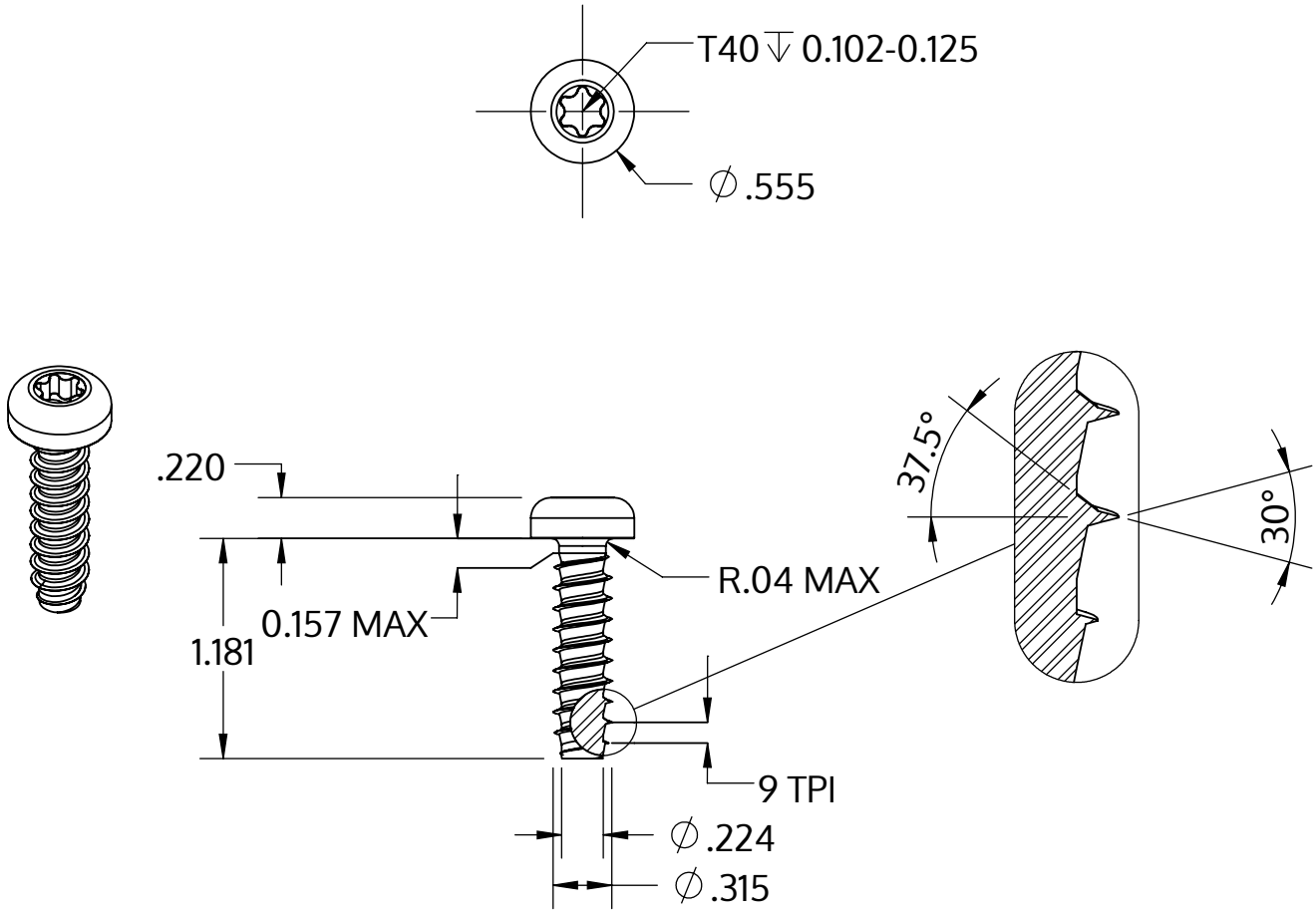

Metric size	M8 x 2.82 mm
US size (converted)	#0.314-9
	Tolerances [inch]
Length	+/- 0.025
Head diameter	+0 / -0.016
Head height	+/- 0.005
Thread diameter	+0.007 / -0

Descriere	STP39 8.0x30.0 - T40
Material	oțel, călit
Exterior	zincat 5-7 µm, recopt, pasivat transparent/albastru
Greutate	12.355 kg / 1000 unități

SCREWERK	**STP390800300S**	
_Zoll Zeichnung Größe A	Scalarea 1:1	2024-10