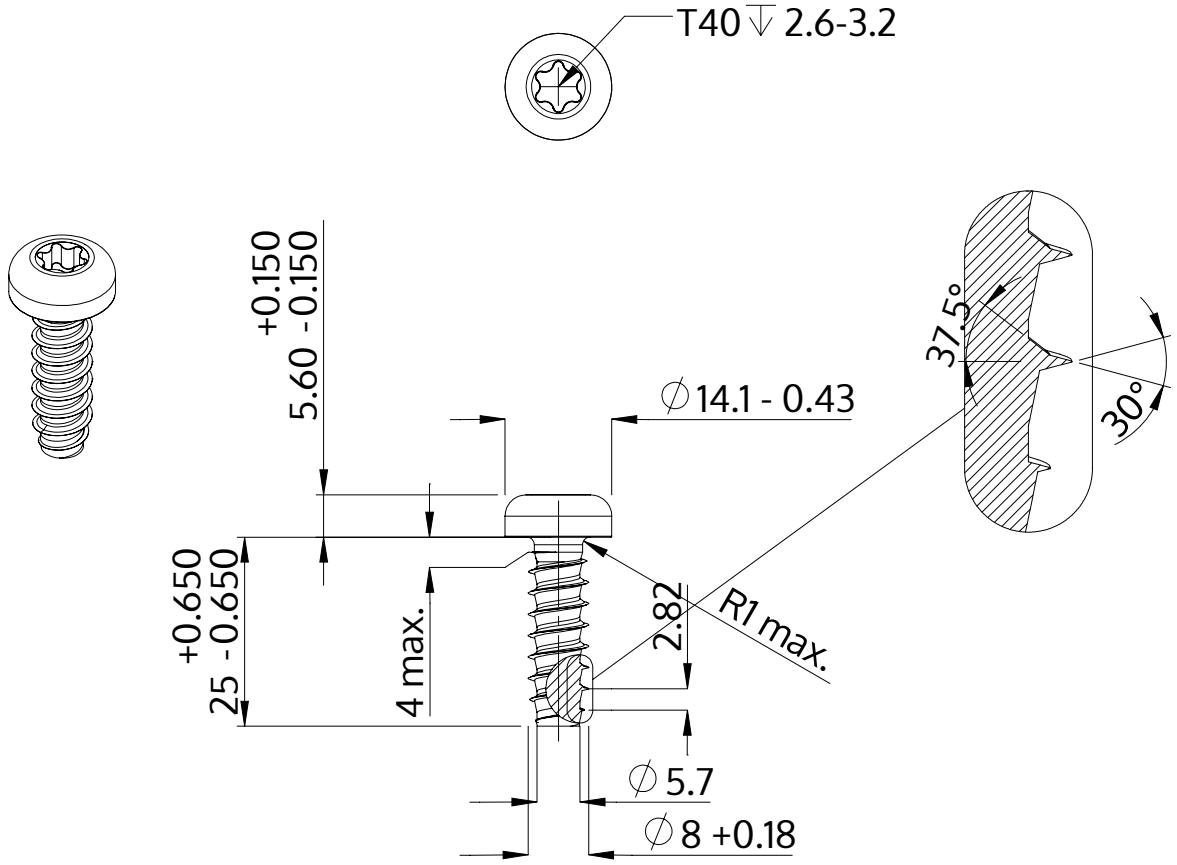

Description	STP39 8.0x25.0 - T40
Material	stainless-steel A2
Surface	bright, pickled and passivated
Weight	11.151 kg / 1000 pieces

SCREWERK	**STP390800250E**	
Metric Drawing A4	Scale 1:1	2024-10