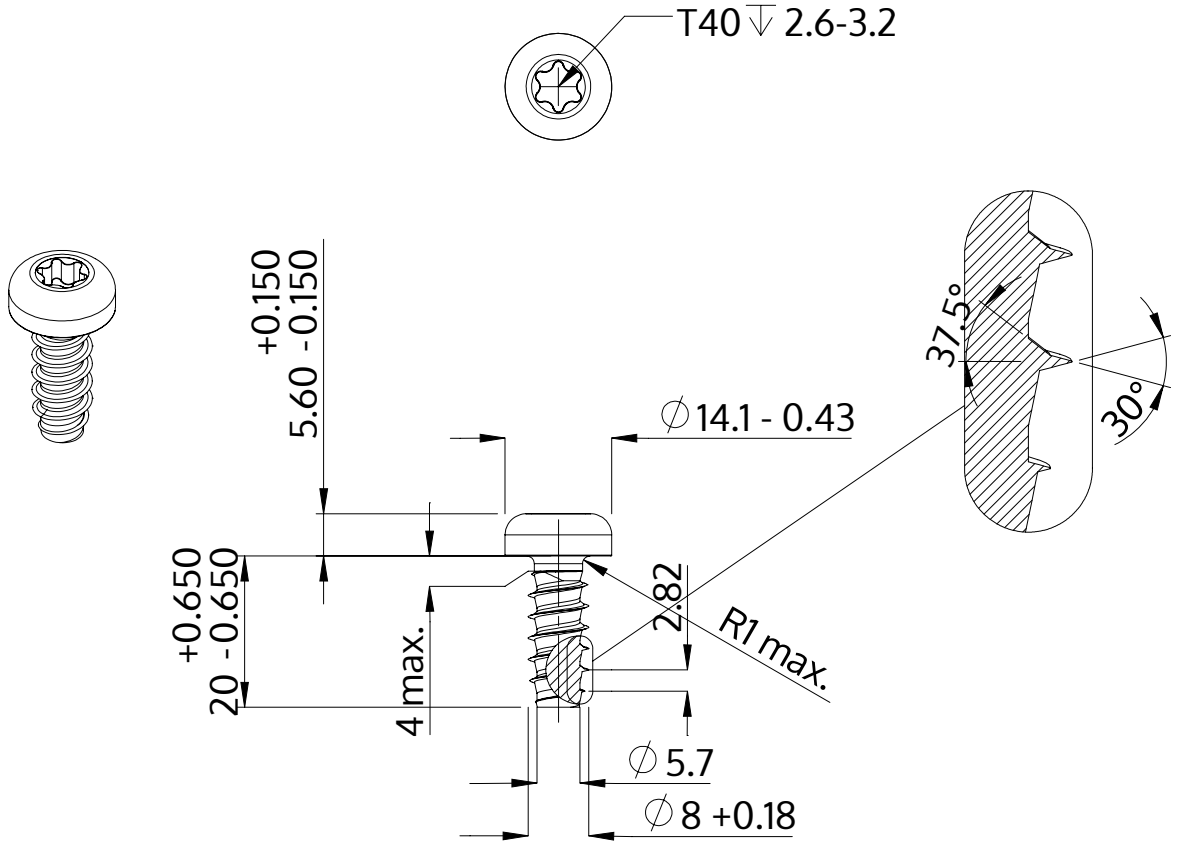

Description	STP39 8.0x20.0 - T40
Material	stainless-steel A2
Surface	bright, pickled and passivated
Weight	9.946 kg / 1000 pieces

SCREWERK	**STP390800200E**	
Metric Drawing A4	Scale None:1	2024-04