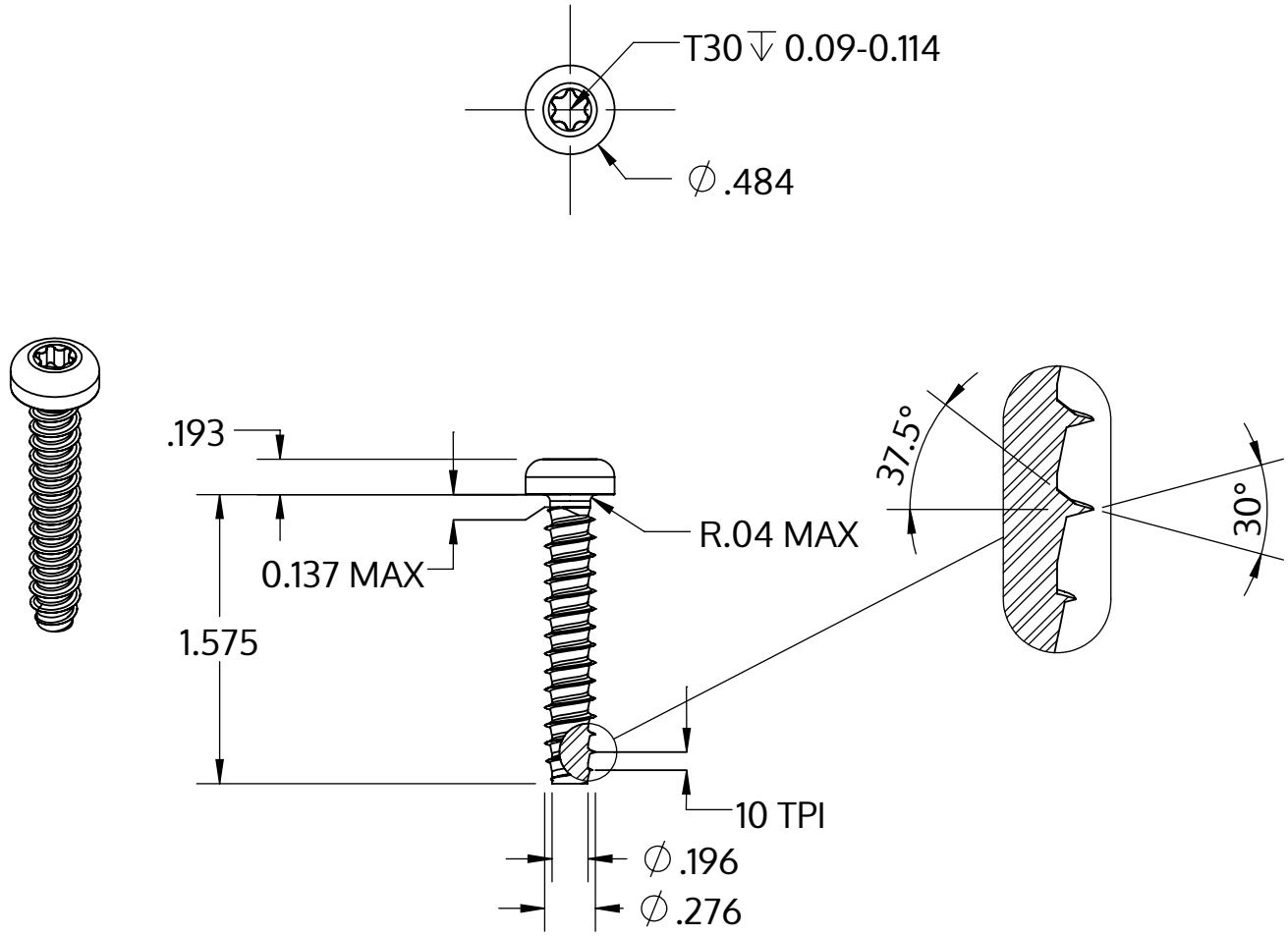

Metric size	M7 x 2.48 mm
US size (converted)	#0.275-10
	Tolerances [inch]
Length	+/- 0.031
Head diameter	+0 / -0.016
Head height	+/- 0.005
Thread diameter	+0.007 / -0

Description	STP39 7.0x40.0 - T30
Material	stainless-steel A2
Surface	bright, pickled and passivated
Weight	10.964 kg / 1000 pieces

SCREWERK	**STP390700400E**	
Inch Drawing Size A	Scale 1:1	2024-10